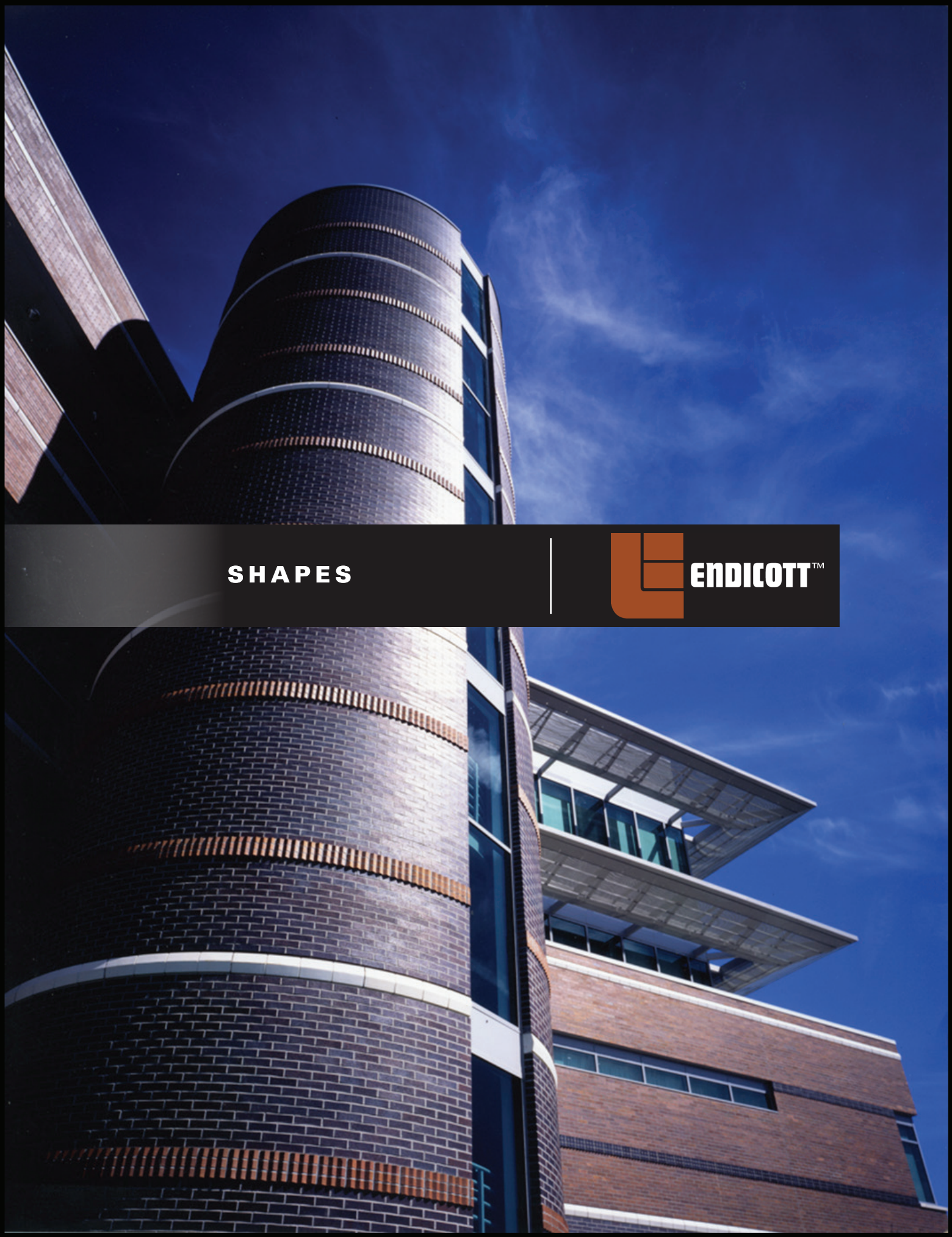

SHAPES

ENDICOTT™

135° External Flatback Corner

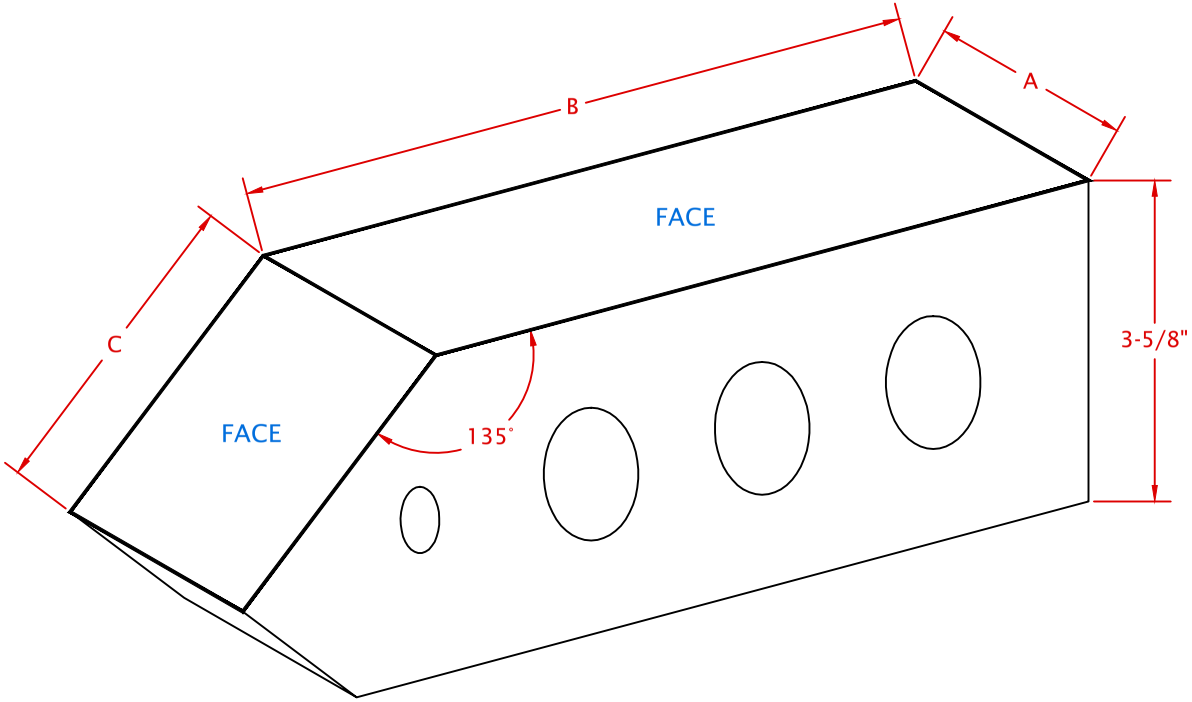

Dimensions Available

A - 2-1/4", 2-5/8", 2-13/16", 3-5/8", 7-5/8"
B - 5-5/8", 6-5/8", 7-5/8"
C - 1-5/8", 2-5/8", 3-5/8"

Coring May Vary

COLOR	QUANTITY
TEXTURE	DATE
JOB	
DISTRIBUTOR	

ENDICOTT™ CLAY PRODUCTS

P.O. Box 17 Fairbury, NE USA 68352 402/729-3315 FAX: 402/729-5804 Email: endicott@endicott.com www.endicott.com

135° External Dogleg Corner

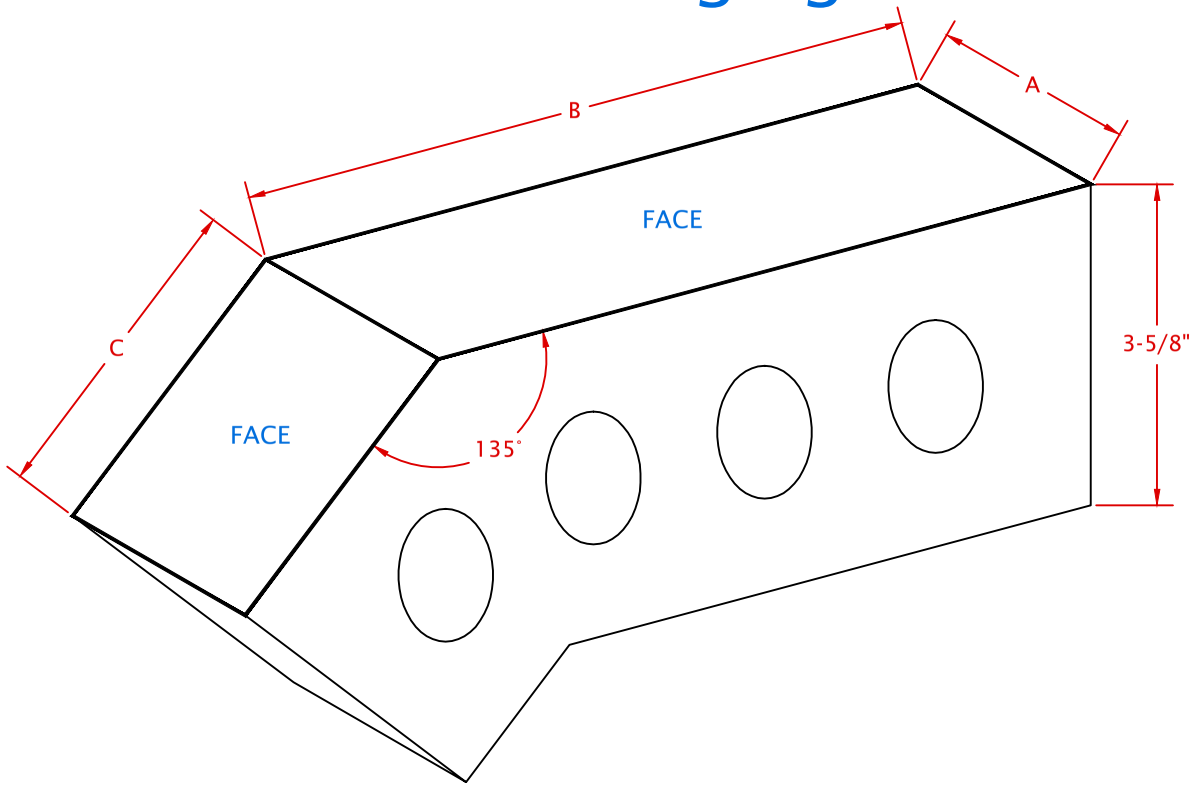

Dimensions Available

A - 2-1/4", 2-5/8", 2-13/16", 3-5/8", 7-5/8"
B - 5-5/8", 6-5/8", 7-5/8"
C - 1-5/8", 2-5/8", 3-5/8"

Coring May Vary

COLOR	QUANTITY
TEXTURE	DATE
JOB	
DISTRIBUTOR	

ENDICOTT™ CLAY PRODUCTS

P.O. Box 17 Fairbury, NE USA 68352 402/729-3315 FAX: 402/729-5804 Email: endicott@endicott.com www.endicott.com

135° Internal Dogleg Corner

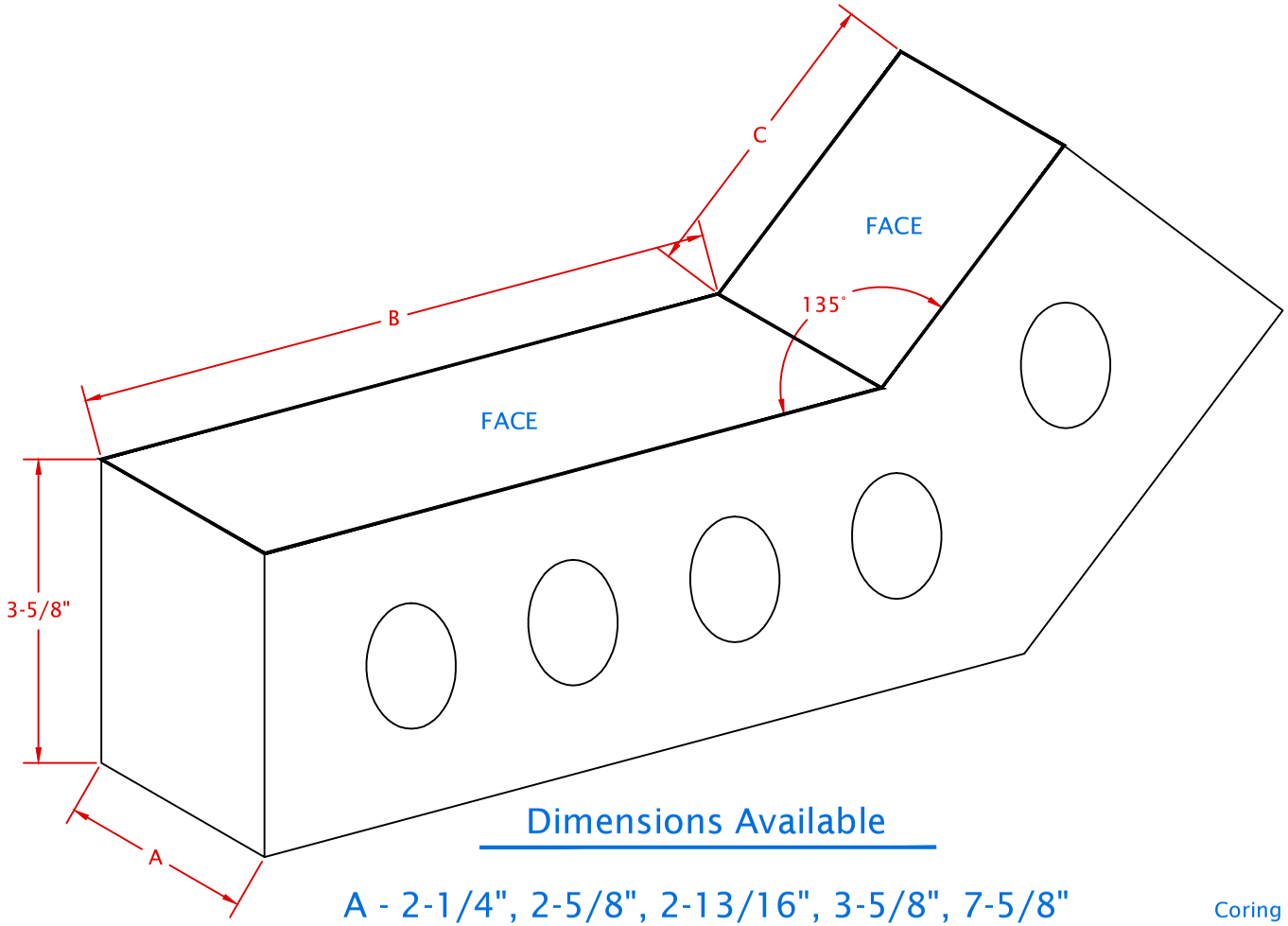

Dimensions Available

A - 2-1/4", 2-5/8", 2-13/16", 3-5/8", 7-5/8"
B - 5-5/8", 6-5/8", 7-5/8"
C - 1-5/8", 2-5/8", 3-5/8"

Coring May Vary

COLOR	QUANTITY
TEXTURE	DATE
JOB	
DISTRIBUTOR	

ENDICOTT™ CLAY PRODUCTS

P.O. Box 17 Fairbury, NE USA 68352 402/729-3315 FAX: 402/729-5804 Email: endicott@endicott.com www.endicott.com

Lip Stretcher

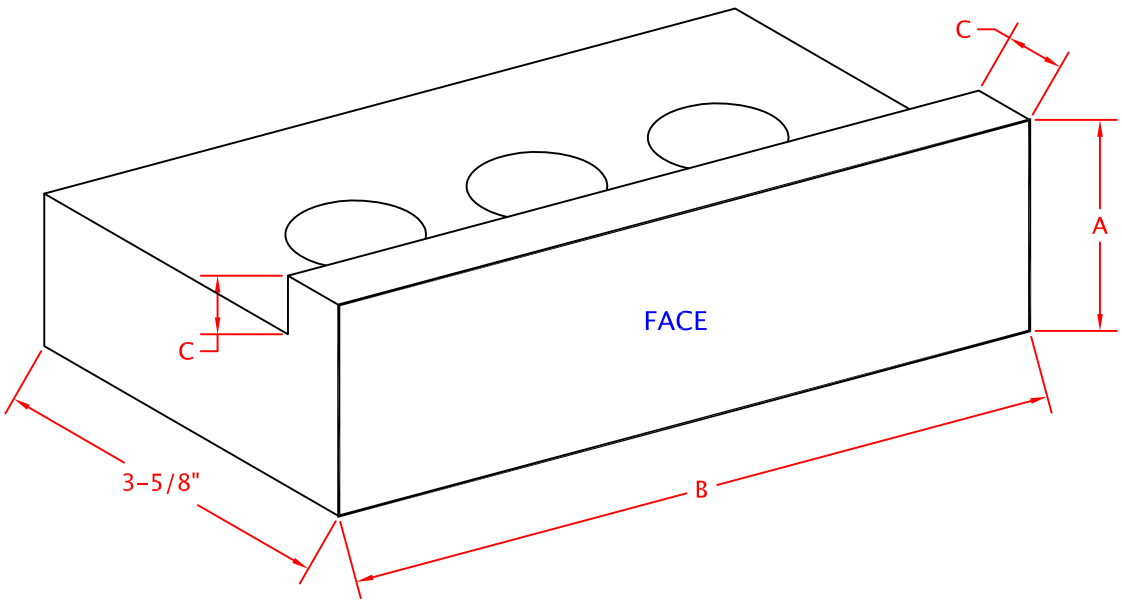

Dimensions Available

A - 2-1/4", 2-13/16", 3-5/8", 5-5/8", 7-5/8"
B - 7-5/8", 11-5/8"
C - Customers choice (if not specified, will be made at 5/8")

Coring May Vary

COLOR	QUANTITY
TEXTURE	DATE
JOB	
DISTRIBUTOR	

ENDICOTT™ CLAY PRODUCTS

P.O. Box 17 Fairbury, NE USA 68352 402/729-3315 FAX: 402/729-5804 Email: endicott@endicott.com www.endicott.com

Lip Stretcher
Left Corner

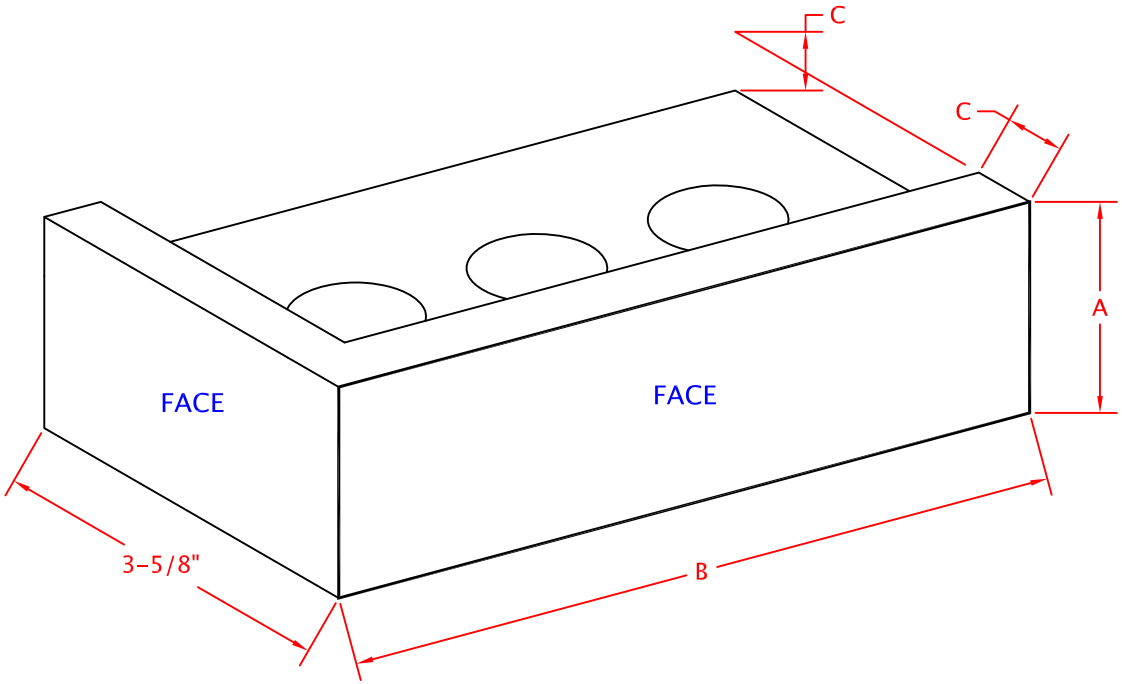

Dimensions Available

A - 2-1/4", 2-13/16", 3-5/8", 5-5/8", 7-5/8"
B - 7-5/8", 11-5/8"
C - Customers choice (if not specified, will be made at 5/8")

Coring May Vary

COLOR	QUANTITY
TEXTURE	DATE
JOB	
DISTRIBUTOR	

ENDICOTT™ CLAY PRODUCTS

P.O. Box 17 Fairbury, NE USA 68352 402/729-3315 FAX: 402/729-5804 Email: endicott@endicott.com www.endicott.com

Lip Stretcher
Right Corner

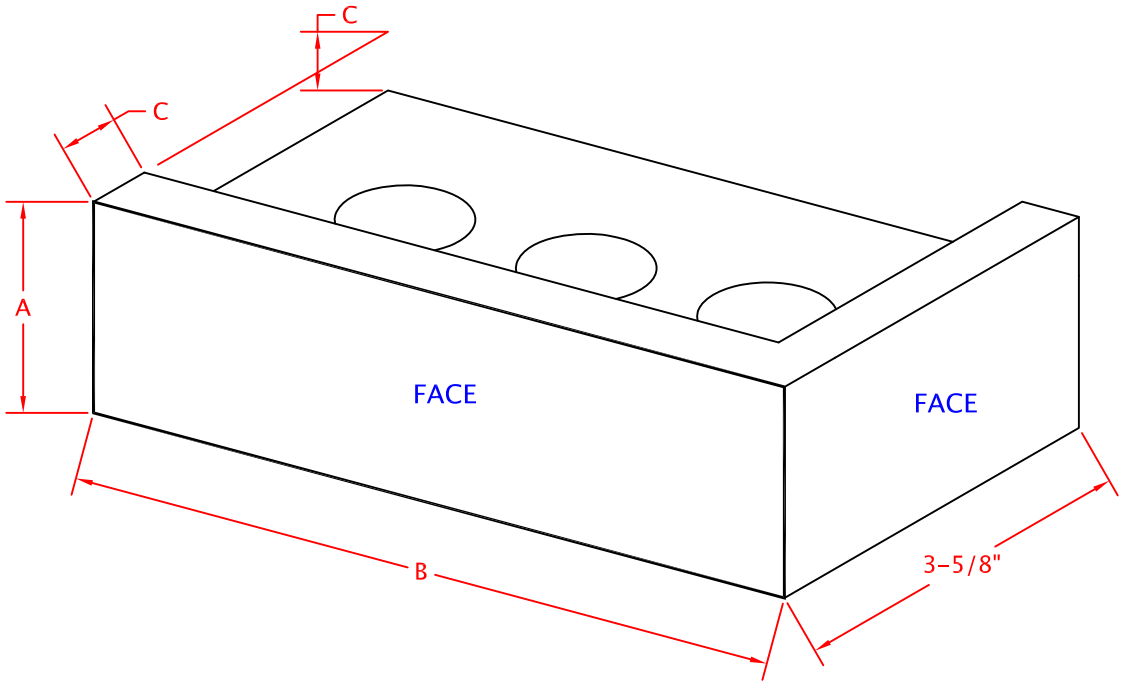

Dimensions Available

A - 2-1/4", 2-13/16", 3-5/8", 5-5/8", 7-5/8"
B - 7-5/8", 11-5/8"
C - Customers choice (if not specified, will be made at 5/8")

Coring May Vary

COLOR	QUANTITY
TEXTURE	DATE
JOB	
DISTRIBUTOR	

ENDICOTT™ CLAY PRODUCTS

P.O. Box 17 Fairbury, NE USA 68352 402/729-3315 FAX: 402/729-5804 Email: endicott@endicott.com www.endicott.com

Lip Soldier

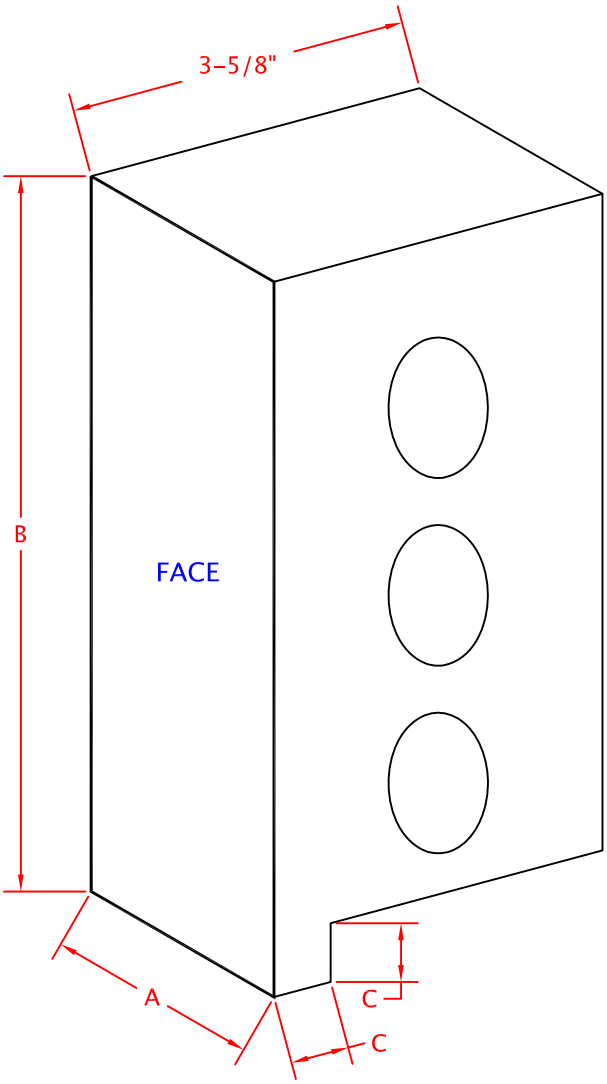

Dimensions Available

A - 2-1/4", 2-13/16", 3-5/8", 7-5/8"
B - 7-5/8", 11-5/8"
C - Customers choice (if not specified, will be made at 5/8")

Coring May Vary

COLOR	QUANTITY
TEXTURE	DATE
JOB	
DISTRIBUTOR	

ENDICOTT™ CLAY PRODUCTS

P.O. Box 17 Fairbury, NE USA 68352 402/729-3315 FAX: 402/729-5804 Email: endicott@endicott.com www.endicott.com

Soldier Lip Corner

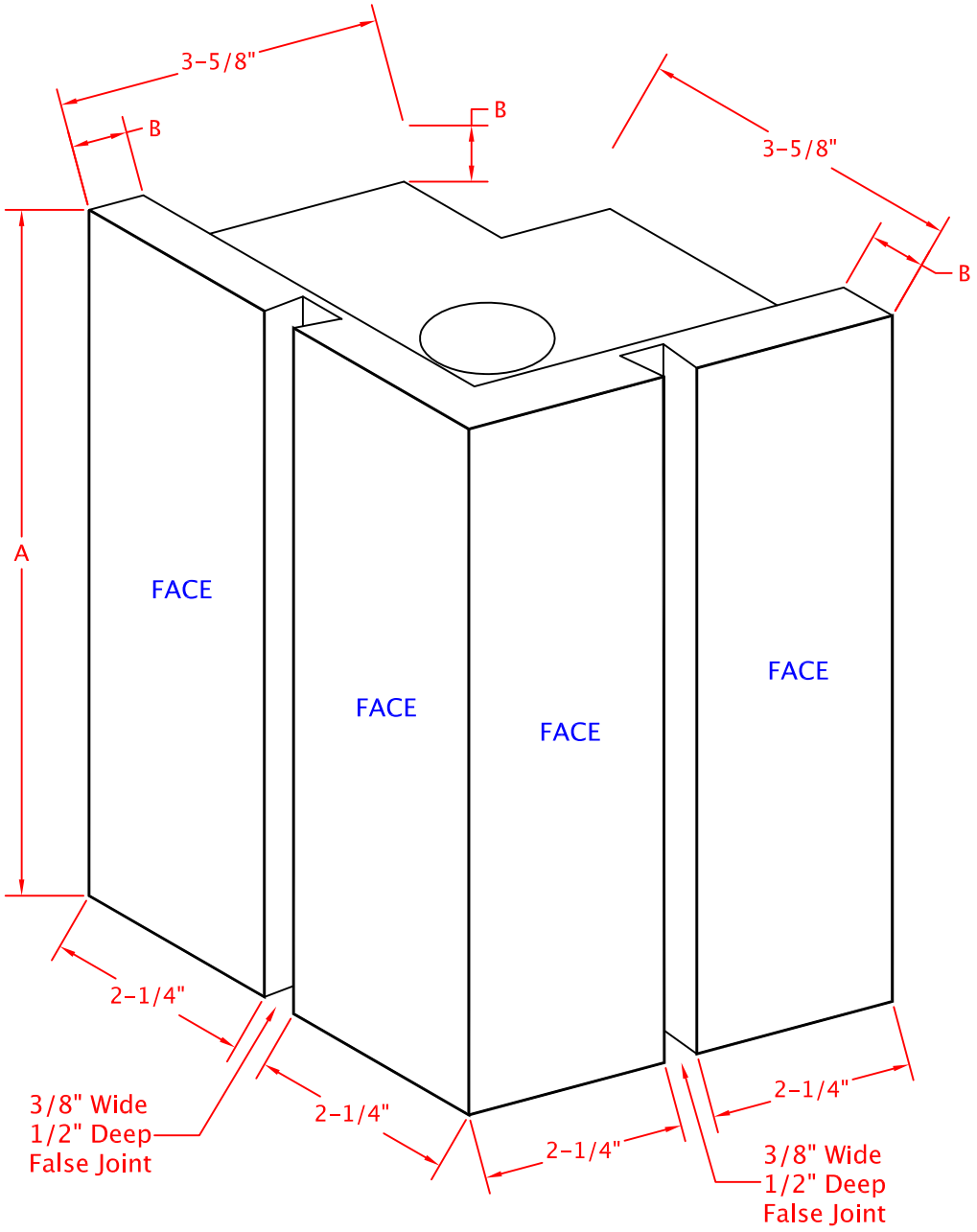

Dimensions Available

A - 7-5/8", 11-5/8"
B - Customers Choice (if not specified, will be made at 5/8")

Coring May Vary

COLOR	QUANTITY
TEXTURE	DATE
JOB	
DISTRIBUTOR	

ENDICOTT™ CLAY PRODUCTS

P.O. Box 17 Fairbury, NE USA 68352 402/729-3315 FAX: 402/729-5804 Email: endicott@endicott.com www.endicott.com

135° External Flatback Lip Corner

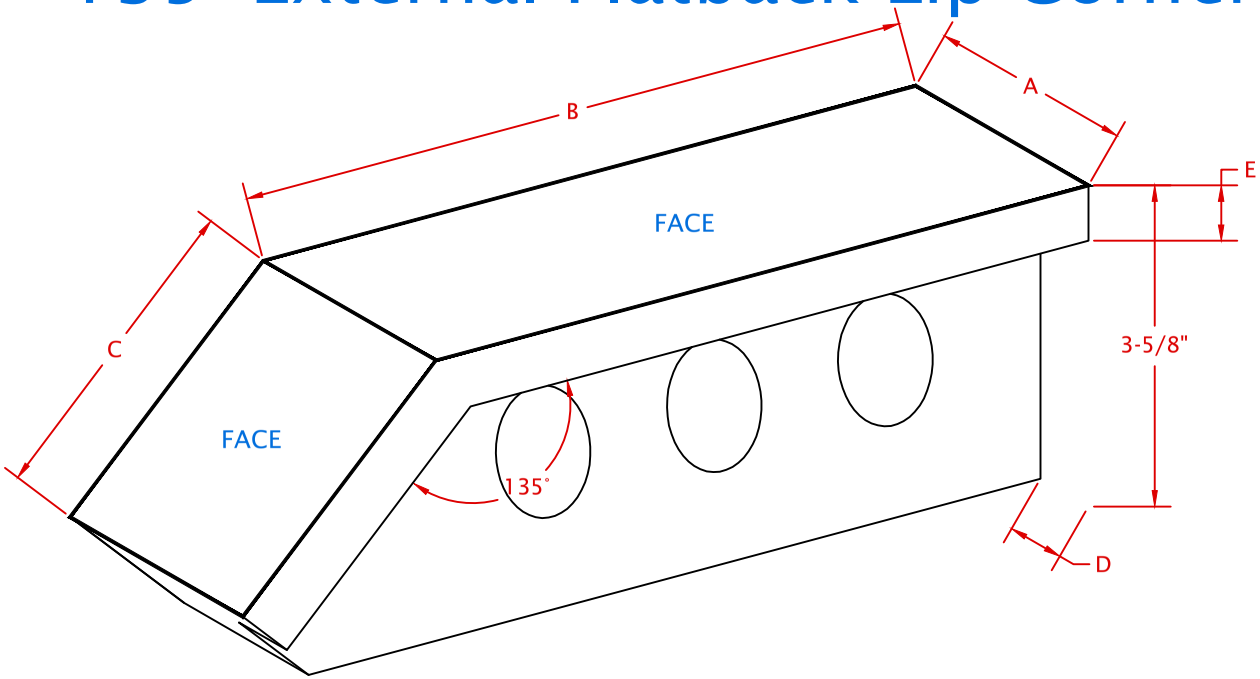

Dimensions Available

A - 2-1/4", 2-5/8", 2-13/16", 3-5/8", 7-5/8"
B - 5-5/8", 6-5/8", 7-5/8"
C - 1-5/8", 2-5/8", 3-5/8"
D - Customer's choice (if not specified, will be made at 5/8")
E - Customer's choice (if not specified, will be made at 5/8")

Coring May Vary

COLOR	QUANTITY
TEXTURE	DATE
JOB	
DISTRIBUTOR	

ENDICOTT™ CLAY PRODUCTS

P.O. Box 17 Fairbury, NE USA 68352 402/729-3315 FAX: 402/729-5804 Email: endicott@endicott.com www.endicott.com

Soldier Corner

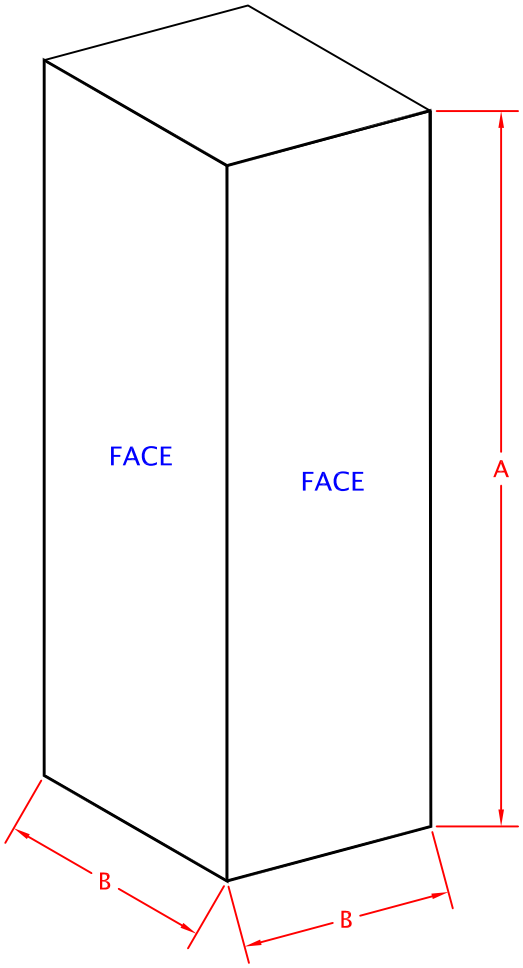

Dimensions Available

A - 7-5/8", 9-5/8", 11-5/8"
B - 2-1/4", 2-5/8", 2-13/16", 3-5/8"

Coring May Vary

COLOR	QUANTITY
TEXTURE	DATE
JOB	
DISTRIBUTOR	

ENDICOTT™ CLAY PRODUCTS

P.O. Box 17 Fairbury, NE USA 68352 402/729-3315 FAX: 402/729-5804 Email: endicott@endicott.com www.endicott.com

Soldier Corner

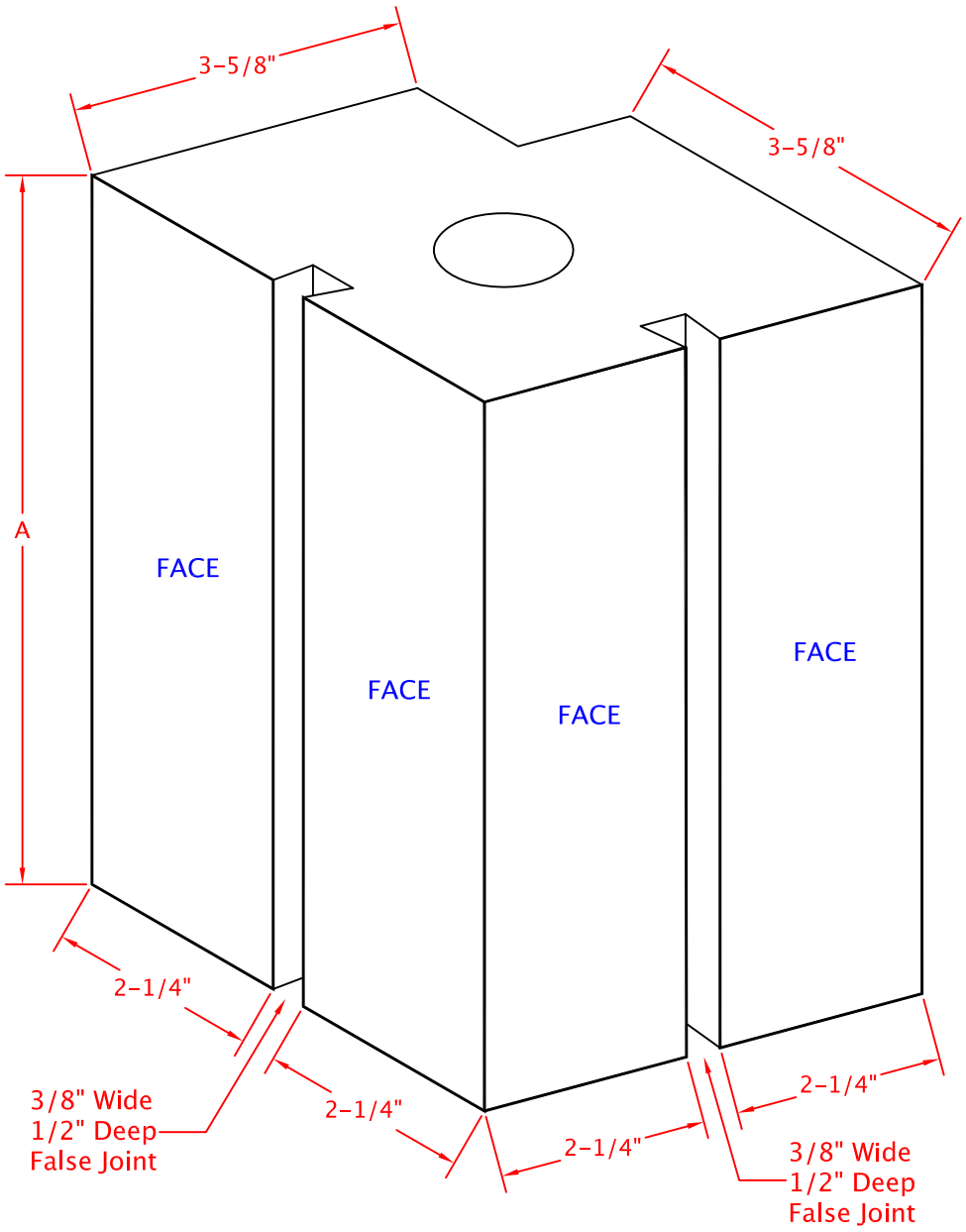

Dimensions Available

A - 7-5/8", 11-5/8"

Coring May Vary

COLOR	QUANTITY
TEXTURE	DATE
JOB	
DISTRIBUTOR	

ENDICOTT™ CLAY PRODUCTS

P.O. Box 17 Fairbury, NE USA 68352 402/729-3315 FAX: 402/729-5804 Email: endicott@endicott.com www.endicott.com

Modular Radial Stretcher

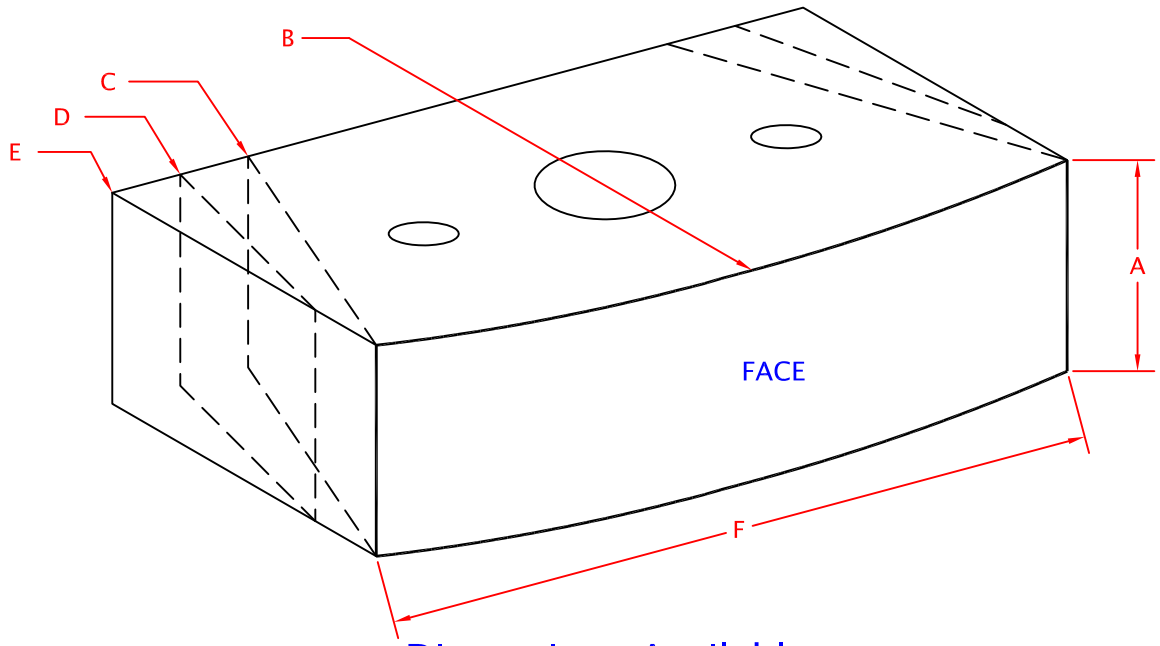

Dimensions Available

A - 2-1/4", 2-13/16", 3-5/8", 7-5/8"
B - Customers choice
C - 4' or less radius requires slanted ends and radial starters
D - 4' to 6' radius requires chamfered ends
E - 6' to 8' radius will be manufactured with square ends*
F - Length dependent on radius and number of units desired per course

* 8' or above radius requires no radial

Coring May Vary

COLOR	QUANTITY
TEXTURE	DATE
JOB	
DISTRIBUTOR	

ENDICOTT™ CLAY PRODUCTS

P.O. Box 17 Falrbury, NE USA 68352 402/729-3315 FAX: 402/729-5804 Email: endlcott@endlcott.com www.endlcott.com

Radial Starter

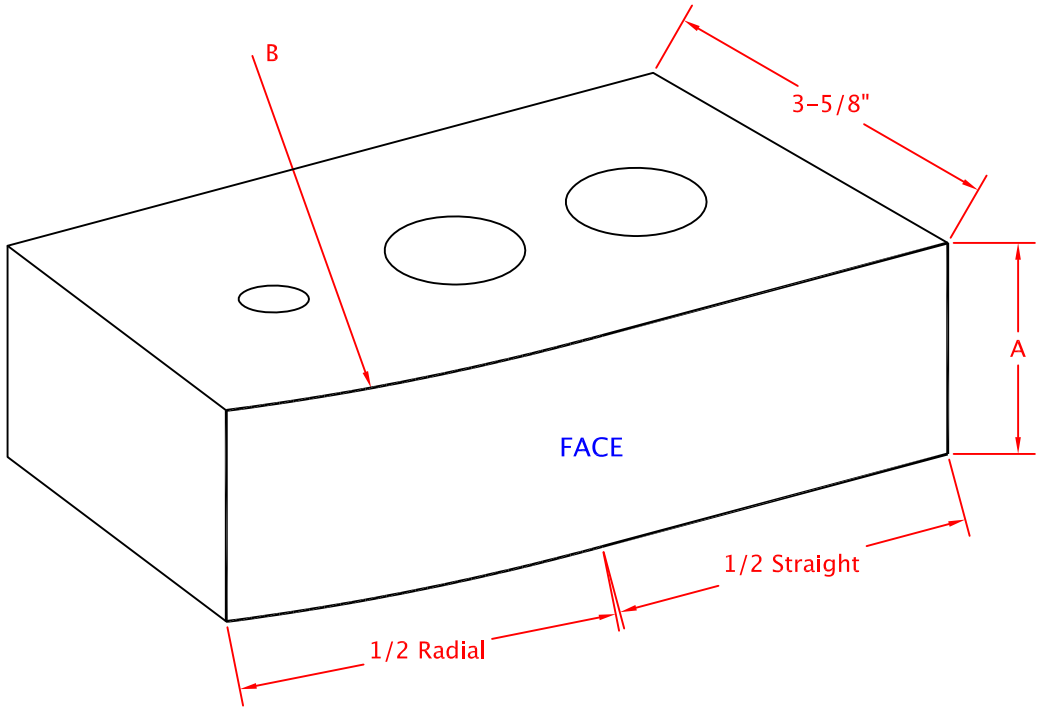

Dimensions Available

A - 2-1/4", 2-13/16", 3-5/8", 5-5/8", 7-5/8"
B - Radius to match radial stretcher

Radial starters required on 6' or less on normans and 4' or less on modulars

Coring May Vary

COLOR	QUANTITY
TEXTURE	DATE
JOB	
DISTRIBUTOR	

ENDICOTT™ CLAY PRODUCTS

P.O. Box 17 Fairbury, NE USA 68352 402/729-3315 FAX: 402/729-5804 Email: endicott@endicott.com www.endicott.com

Internal Radial

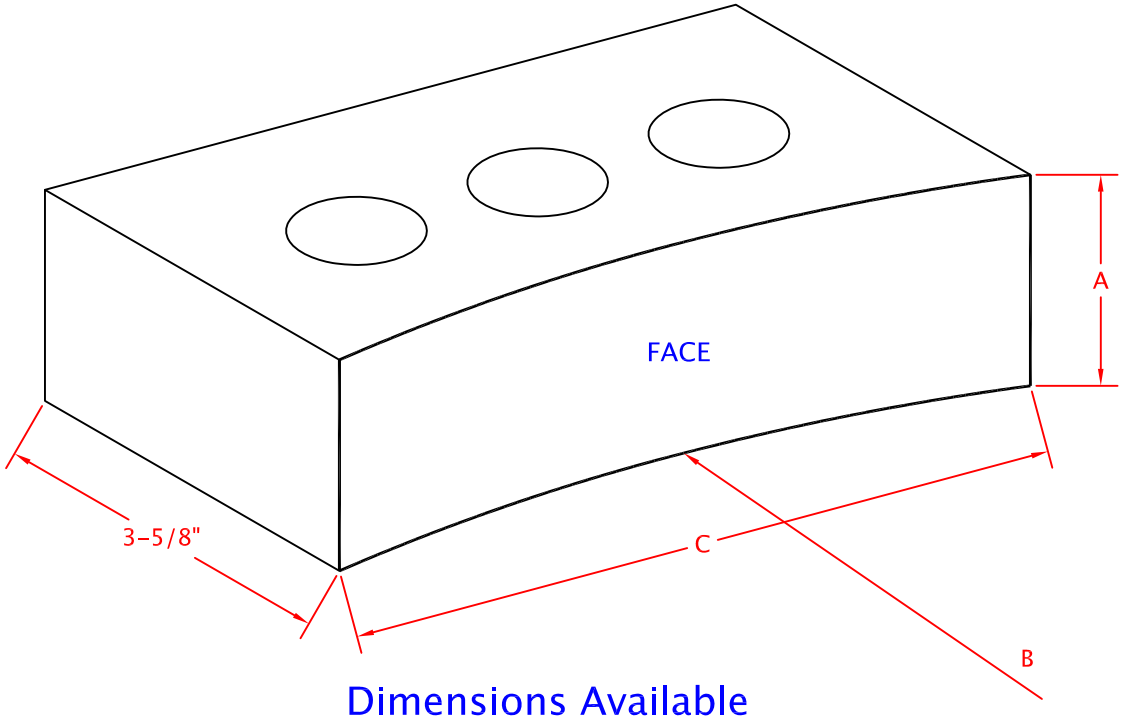

Dimensions Available

A - 2-1/4", 2-13/16", 3-5/8", 7-5/8"
B - Customers choice
C - Length dependent on radius and number of units desired per course

4' or less radius on modulars and 6' or less on normans requires radial starters
8' or above on modulars and 12' or above on normans require no radial

Coring May Vary

COLOR	QUANTITY
TEXTURE	DATE
JOB	
DISTRIBUTOR	

ENDICOTT™ CLAY PRODUCTS

P.O. Box 17 Fairbury, NE USA 68352 402/729-3315 FAX: 402/729-5804 Email: endicott@endicott.com www.endicott.com

Internal Radial Starter

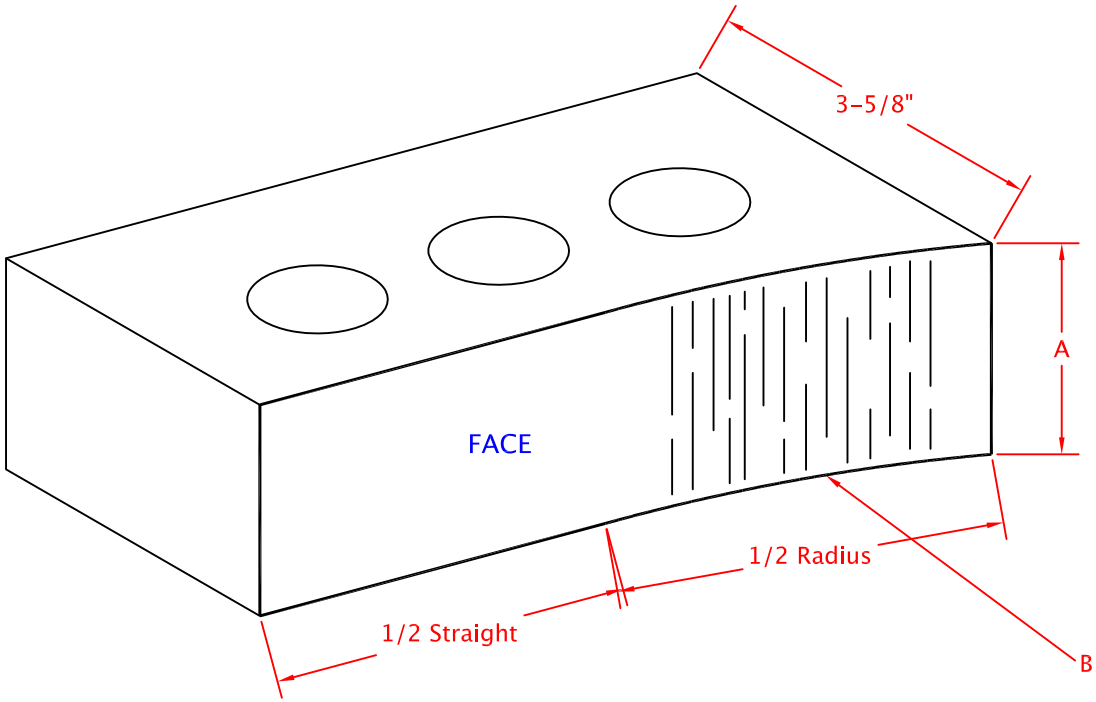

Dimensions Available

A - 2-1/4", 2-13/16", 3-5/8", 7-5/8"

B - Radius to match radial stretcher

Radial starters required on 6' or less on normans and 4' or less on modulars

Coring May Vary

COLOR	QUANTITY
TEXTURE	DATE
JOB	
DISTRIBUTOR	

ENDICOTT™ CLAY PRODUCTS

P.O. Box 17 Fairbury, NE USA 68352 402/729-3315 FAX: 402/729-5804 Email: endicott@endicott.com www.endicott.com

Norman Radial

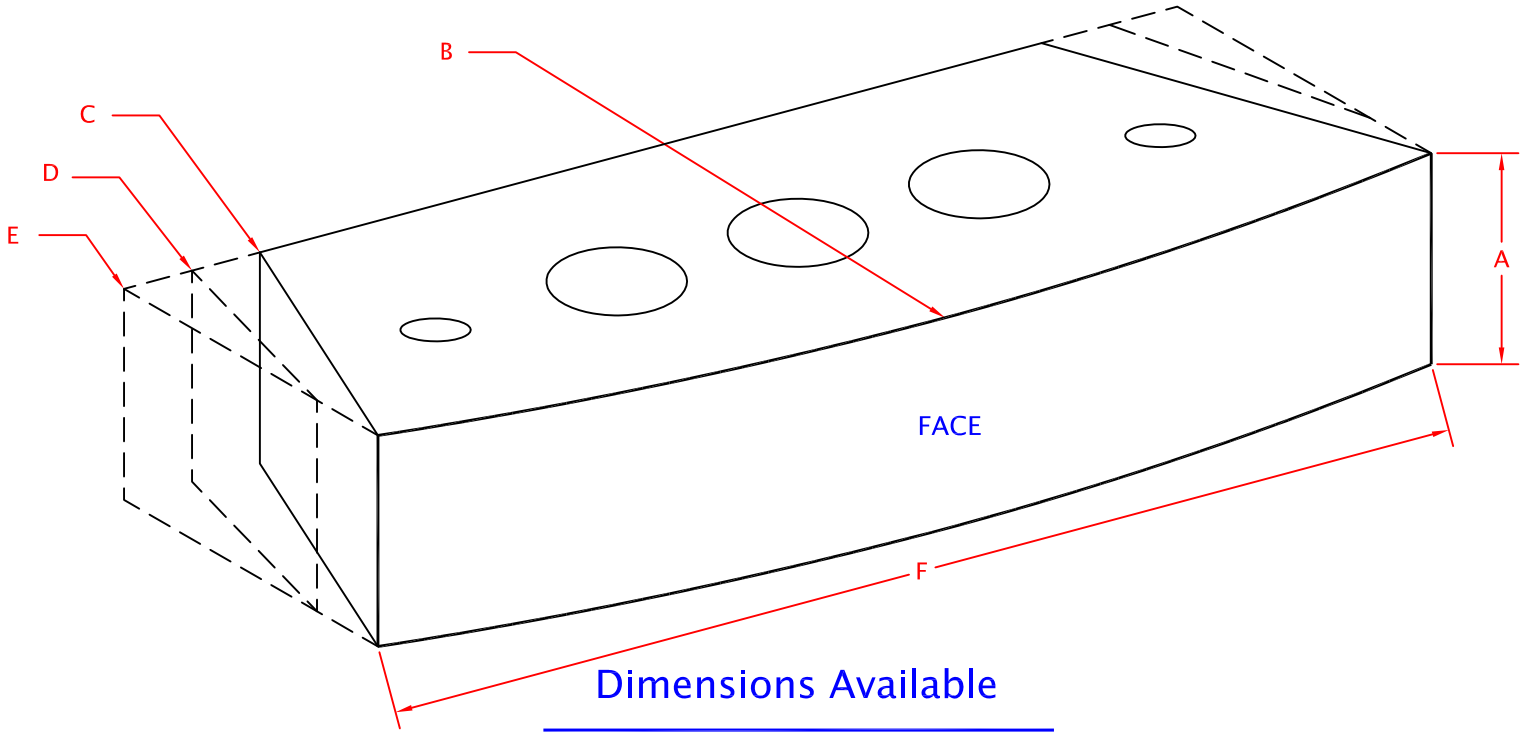

Dimensions Available

A – 2-1/4", 2-13/16", 3-5/8", 7-5/8"
B – Customers choice
C – 6' or less radius requires slanted ends and radial starters
D – 6' to 8' radius requires chamfered ends
E – 8' to 12' radius will be manufactured with square ends*
F – Length dependent on radius and number of units desired per course

* 12' or above radius requires no radial

Coring May Vary

COLOR	QUANTITY
TEXTURE	DATE
JOB	
DISTRIBUTOR	

ENDICOTT™ CLAY PRODUCTS

P.O. Box 17 Fairbury, NE USA 68352 402/729-3315 FAX: 402/729-5804 Email: endicott@endicott.com www.endicott.com

Norman Radial Starter

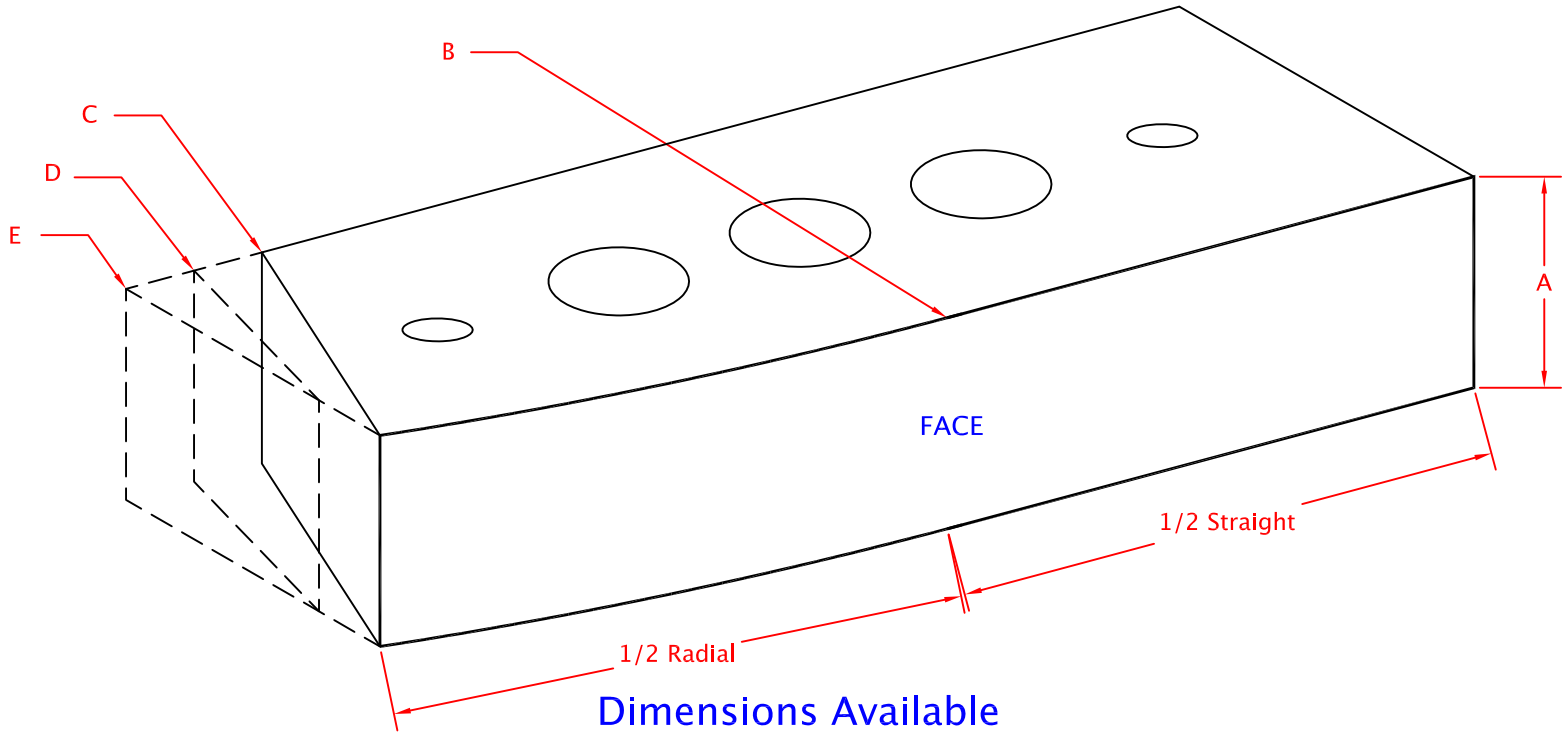

Dimensions Available

A – 2-1/4", 2-13/16", 3-5/8", 7-5/8"
B – Radius to match radial stretcher
C – 6' or less radius requires slanted ends and radial starters
D – 6' to 8' radius requires chamfered ends
E – 8' to 12' radius will be manufactured with square ends*

* 12' or above radius requires no radial

Coring May Vary

COLOR	QUANTITY
TEXTURE	DATE
JOB	
DISTRIBUTOR	

ENDICOTT™ CLAY PRODUCTS

P.O. Box 17 Fairbury, NE USA 68352 402/729-3315 FAX: 402/729-5804 Email: endicott@endicott.com www.endicott.com

45° External Corner

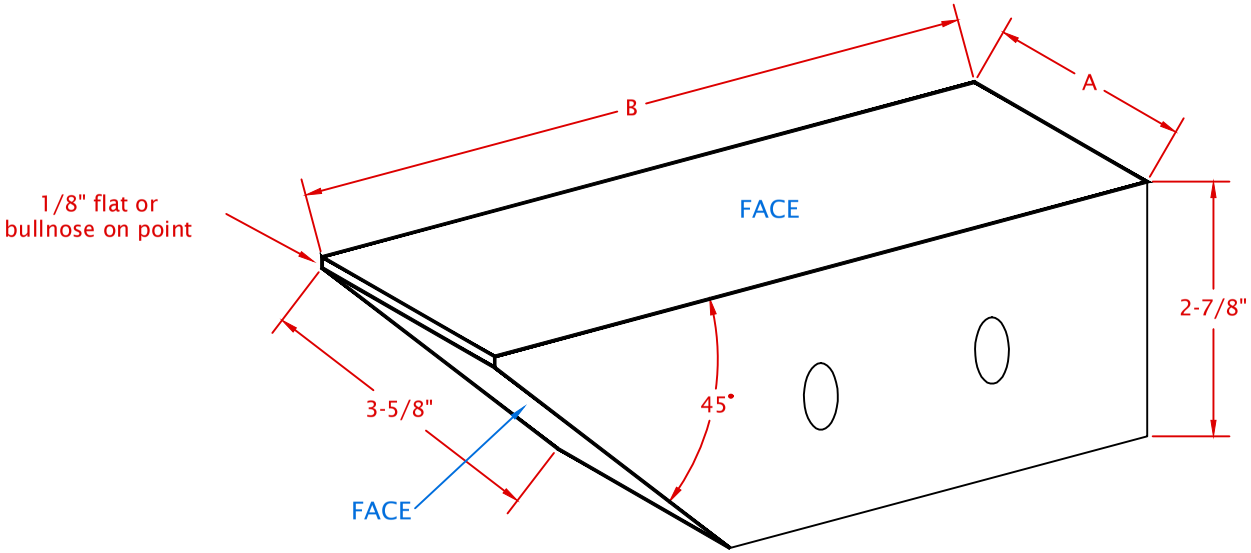

Dimensions Available

A - 2-1/4", 2-13/16", 3-5/8", 7-5/8"
B - 7-5/8", 9-5/8", 11-5/8"

Coring May Vary

COLOR	QUANTITY
TEXTURE	DATE
JOB	
DISTRIBUTOR	

ENDICOTT™ CLAY PRODUCTS

P.O. Box 17 Fairbury, NE USA 68352 402/729-3315 FAX: 402/729-5804 Email: endicott@endicott.com www.endicott.com

135° Chamfered Sill

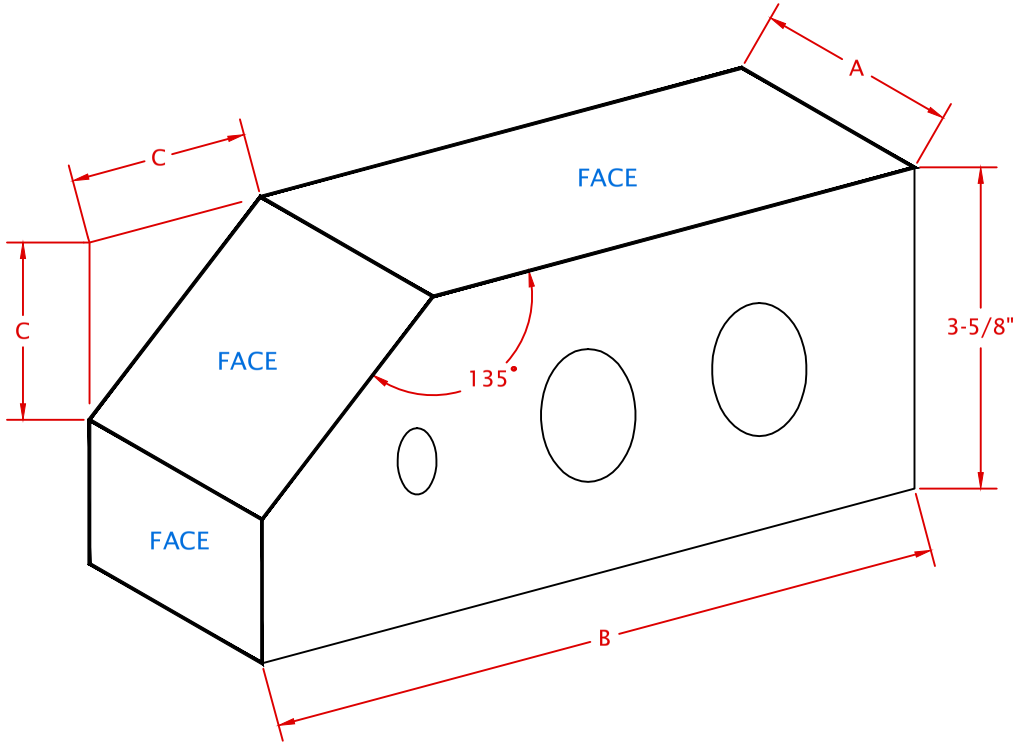

Dimensions Available

A - 2-1/4", 2-13/16", 3-5/8", 7-5/8", 11-5/8"
B - 7-5/8", 9-5/8", 11-5/8"
C - Customers choice

Coring May Vary

COLOR	QUANTITY
TEXTURE	DATE
JOB	
DISTRIBUTOR	

ENDICOTT™ CLAY PRODUCTS

P.O. Box 17 Fairbury, NE USA 68352 402/729-3315 FAX: 402/729-5804 Email: endicott@endicott.com www.endicott.com

Bullnose Rolok

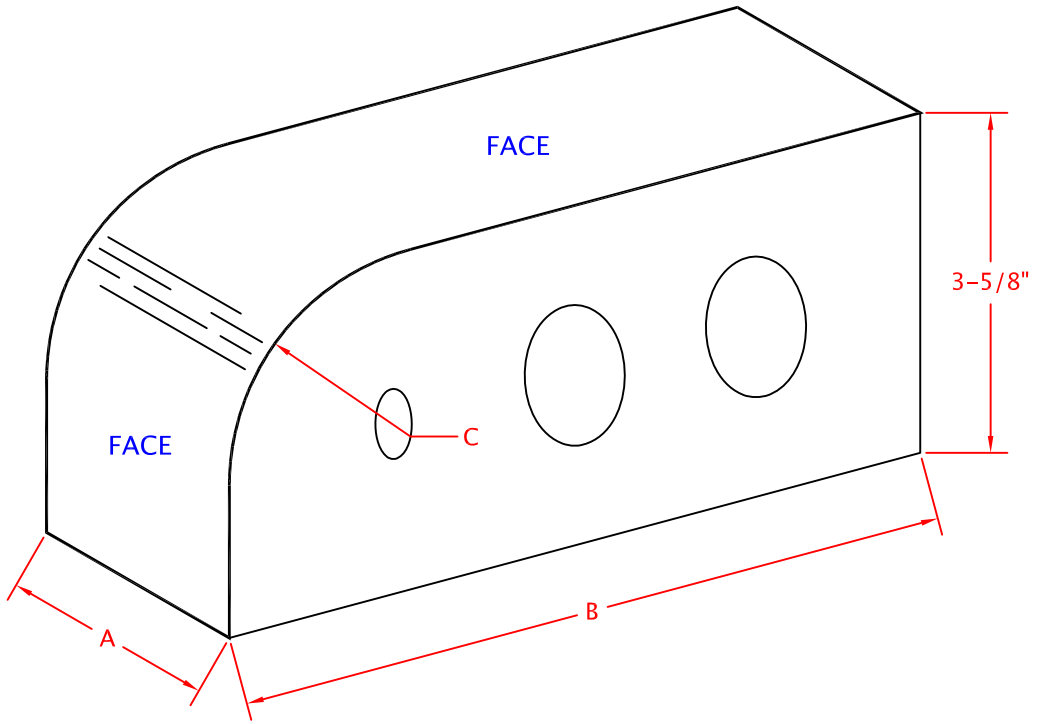

Dimensions Available

A - 2-1/4", 2-13/16", 3-5/8", 7-5/8", 11-5/8"
B - 3-5/8", 7-5/8", 9-5/8", 11-5/8"
C - Customers choice

Coring May Vary

COLOR	QUANTITY
TEXTURE	DATE
JOB	
DISTRIBUTOR	

ENDICOTT™ CLAY PRODUCTS

P.O. Box 17 Falrbury, NE USA 68352 402/729-3315 FAX: 402/729-5804 Email: endlcott@endlcott.com www.endlcott.com

Watertable Rolok

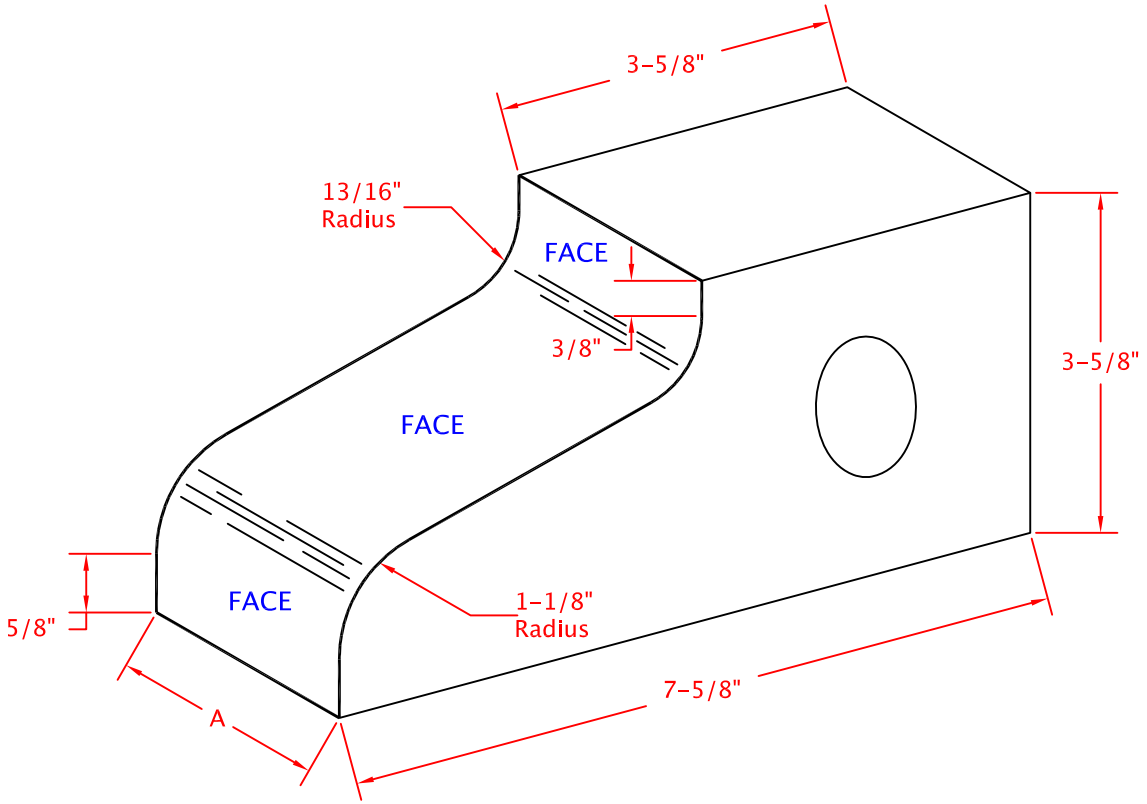

Dimensions Available

A - 2-1/4", 2-13/16", 3-5/8", 7-5/8"

Coring May Vary

COLOR	QUANTITY
TEXTURE	DATE
JOB	
DISTRIBUTOR	

ENDICOTT™ CLAY PRODUCTS

P.O. Box 17 Falrbury, NE USA 68352 402/729-3315 FAX: 402/729-5804 Email: endlcott@endlcott.com www.endlcott.com

Watertable Rolok Corner

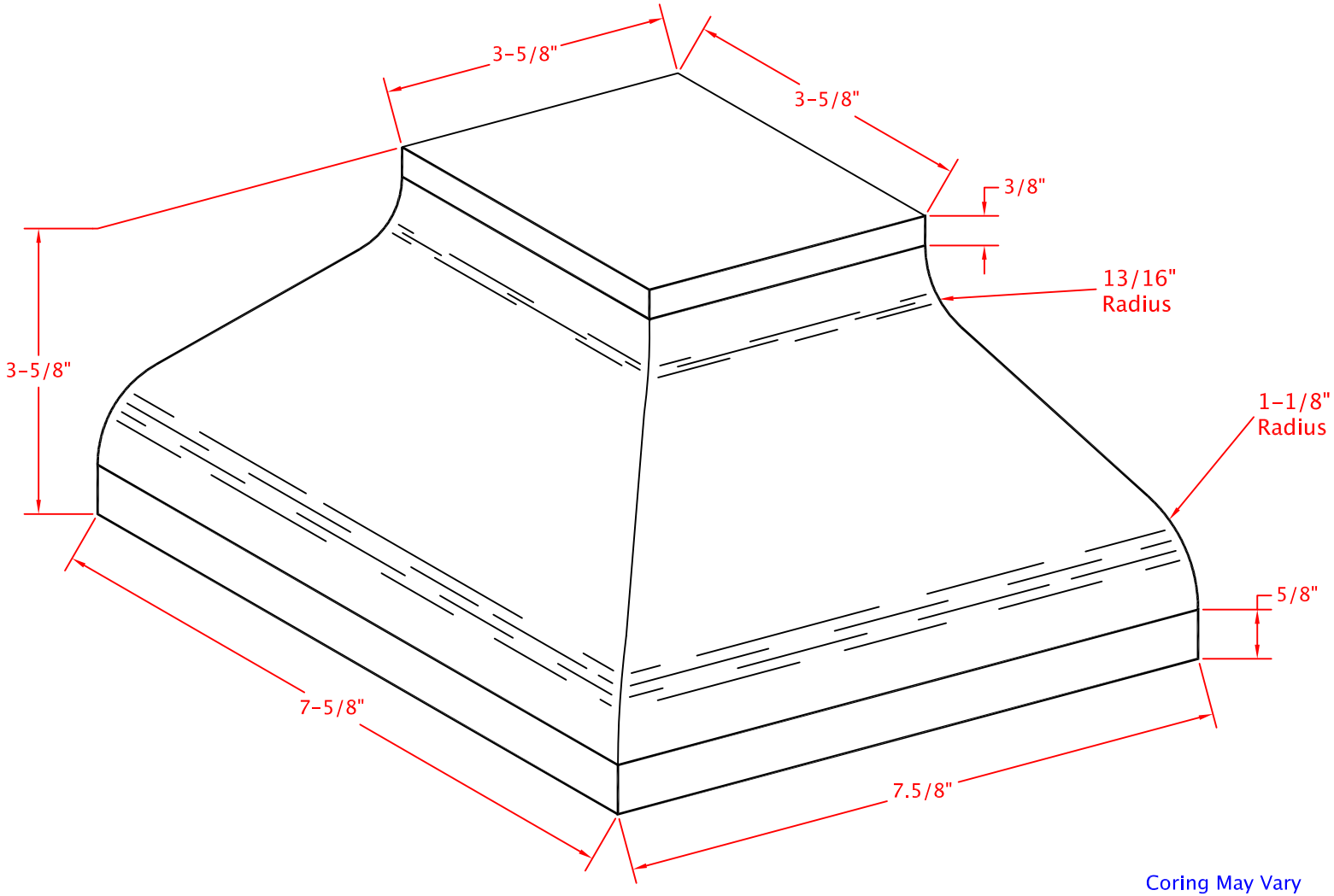

Coring May Vary

COLOR	QUANTITY
TEXTURE	DATE
JOB	
DISTRIBUTOR	

ENDICOTT™ CLAY PRODUCTS

P.O. Box 17 Fairbury, NE USA 68352 402/729-3315 FAX: 402/729-5804 Email: endicott@endicott.com www.endicott.com

Coping Rolok

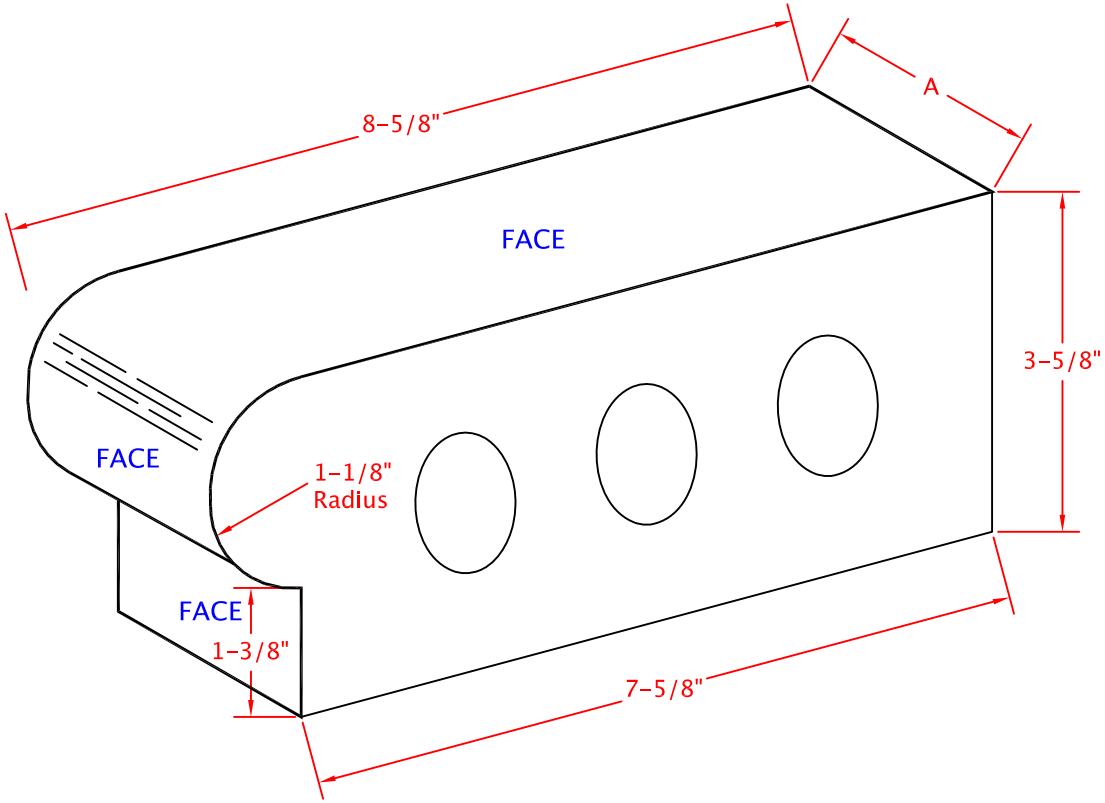

Dimensions Available

A - 2-1/4", 2-13/16", 3-5/8", 7-5/8"

Coring May Vary

COLOR	QUANTITY
TEXTURE	DATE
JOB	
DISTRIBUTOR	

ENDICOTT™ CLAY PRODUCTS

P.O. Box 17 Fairbury, NE USA 68352 402/729-3315 FAX: 402/729-5804 Email: endicott@endicott.com www.endicott.com

Hinge Brick

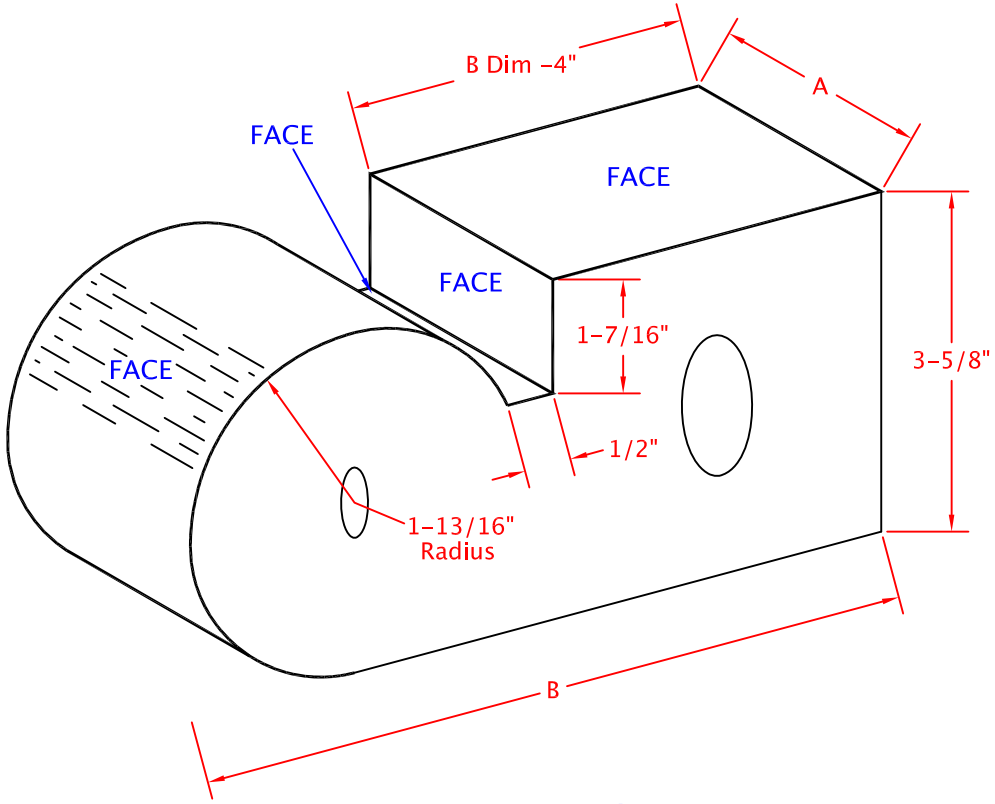

Dimensions Available

A - 2-1/4", 2-5/8", 2-13/16", 3-5/8", 7-5/8"
B - 7-5/8", 9-5/8", 11-5/8"

Coring May Vary

COLOR	QUANTITY
TEXTURE	DATE
JOB	
DISTRIBUTOR	

ENDICOTT™ CLAY PRODUCTS

P.O. Box 17 Fairbury, NE USA 68352 402/729-3315 FAX: 402/729-5804 Email: endicott@endicott.com www.endicott.com

Bullnose Paver

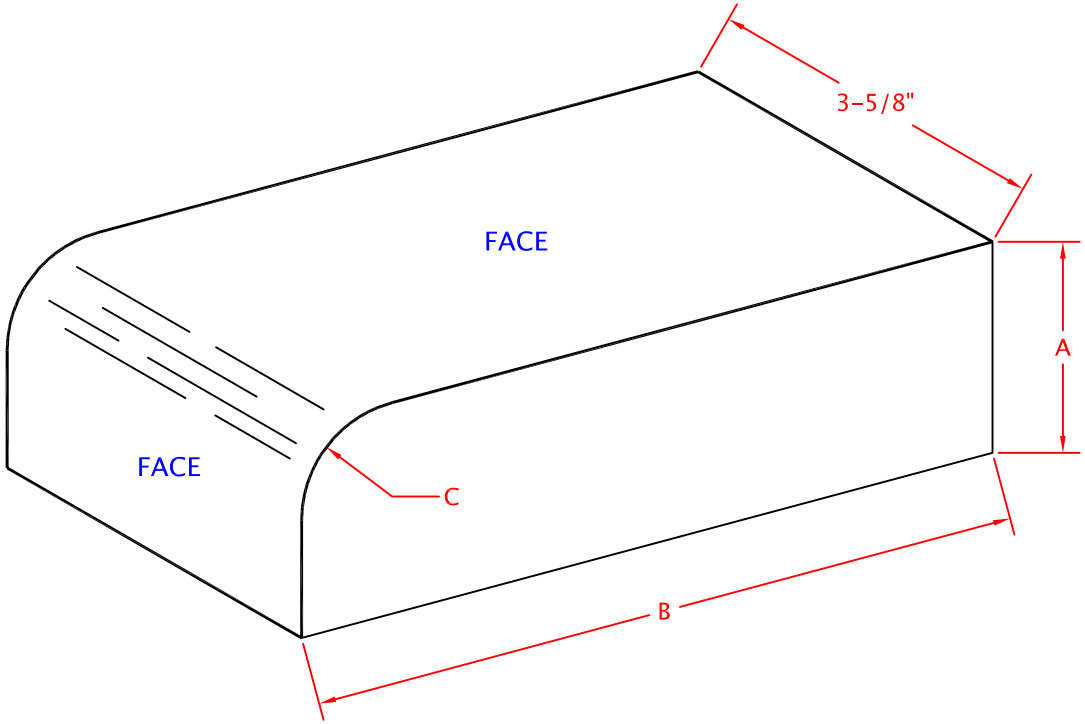

Dimensions Available

A - 1-1/4", 1-5/8", 2-1/4", 2-5/8"
B - 7-5/8", 11-5/8"
C - Customers choice

Coring May Vary

COLOR	QUANTITY
TEXTURE	DATE
JOB	
DISTRIBUTOR	

ENDICOTT™ CLAY PRODUCTS

P.O. Box 17 Fairbury, NE USA 68352 402/729-3315 FAX: 402/729-5804 Email: endicott@endicott.com www.endicott.com

90° Triple Brick Corner

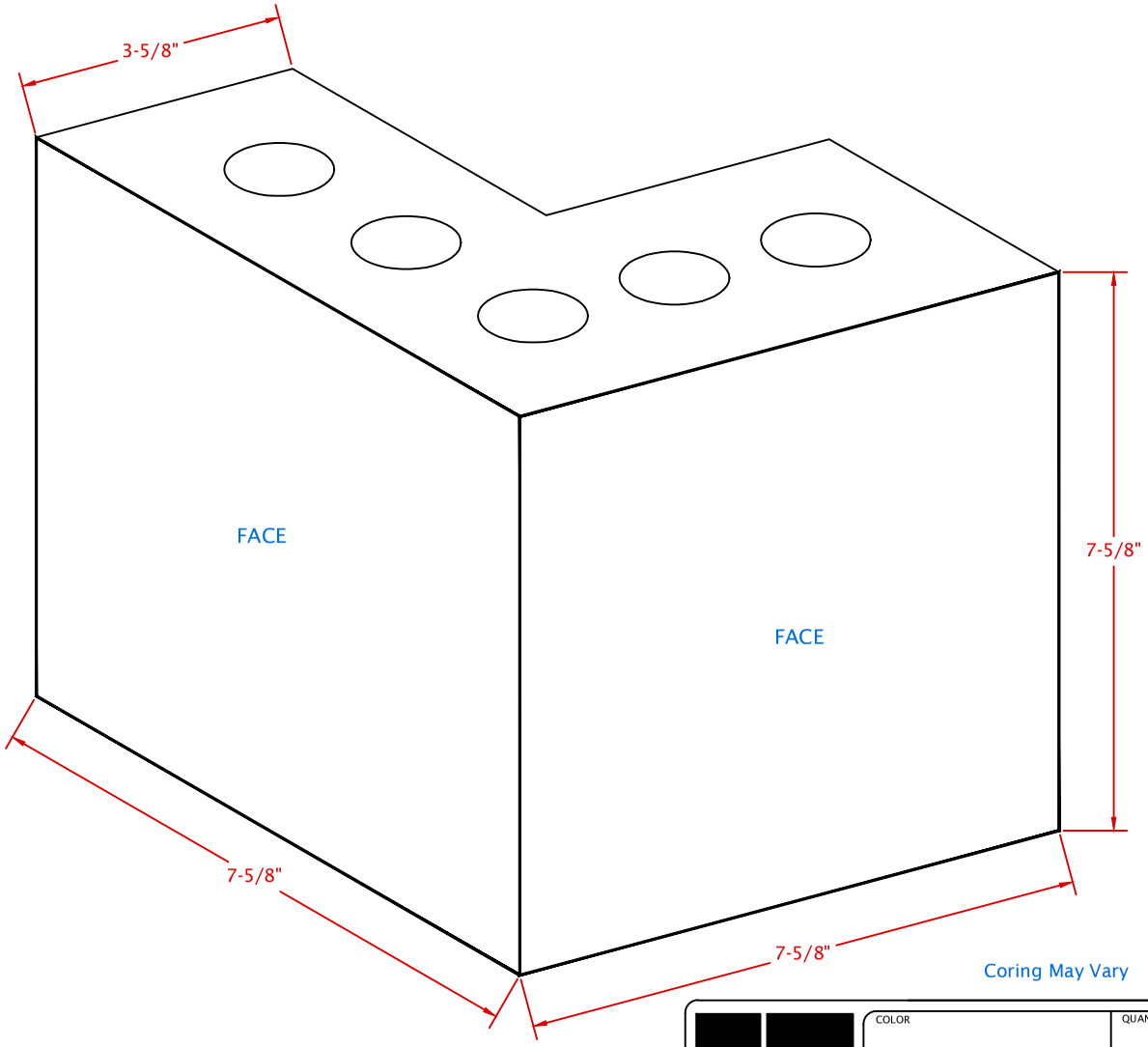

Coring May Vary

COLOR	QUANTITY
TEXTURE	DATE
JOB	
DISTRIBUTOR	

ENDICOTT™ CLAY PRODUCTS

P.O. Box 17 Fairbury, NE USA 68352 402/729-3315 FAX: 402/729-5804 Email: endicott@endicott.com www.endicott.com

90° Giant Norman Corner

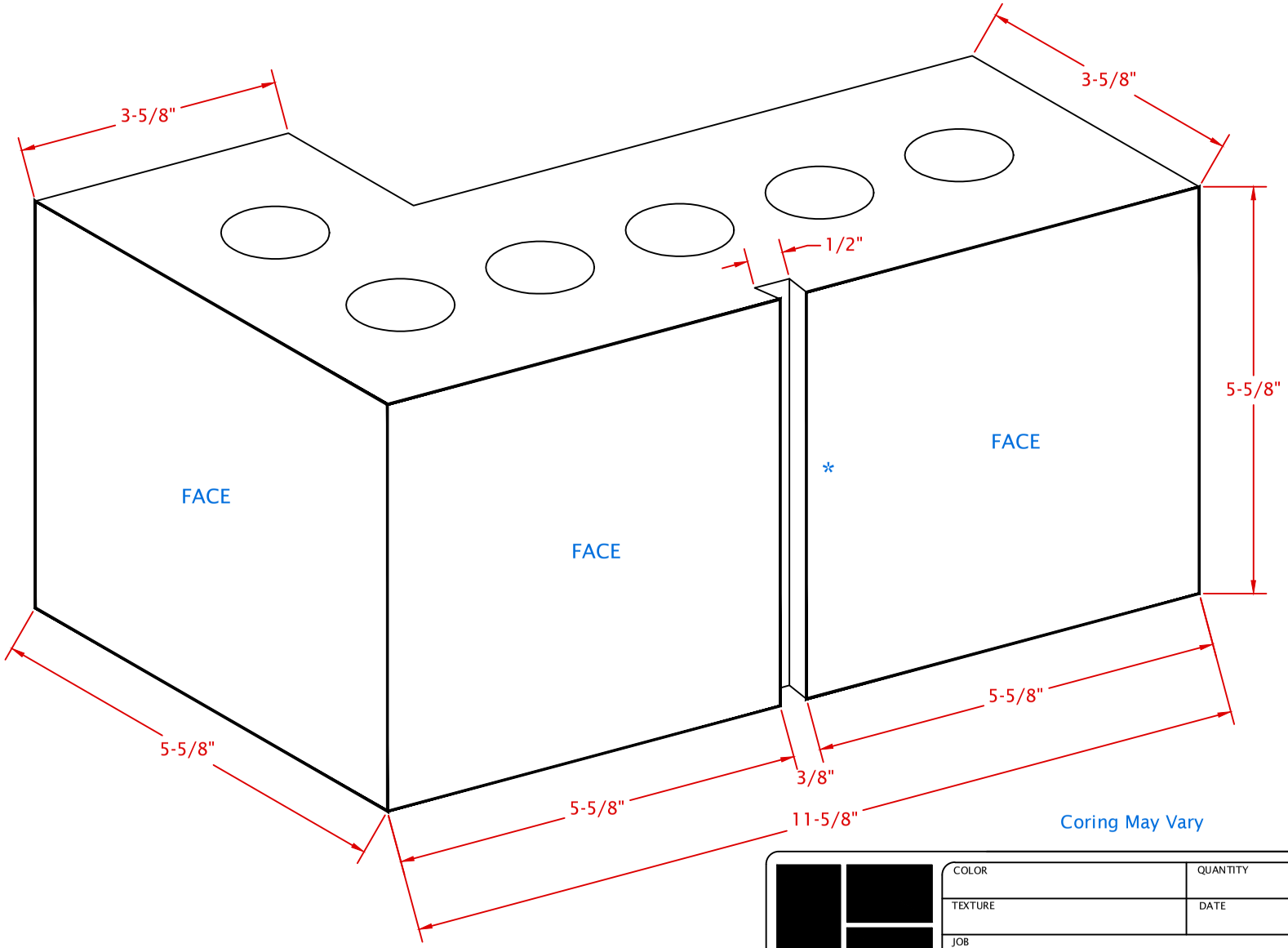

Coring May Vary

* Center slot optional

COLOR	QUANTITY
TEXTURE	DATE
JOB	
DISTRIBUTOR	

ENDICOTT™ CLAY PRODUCTS

P.O. Box 17 Fairbury, NE USA 68352 402/729-3315 FAX: 402/729-5804 Email: endicott@endicott.com www.endicott.com

90° L Corner

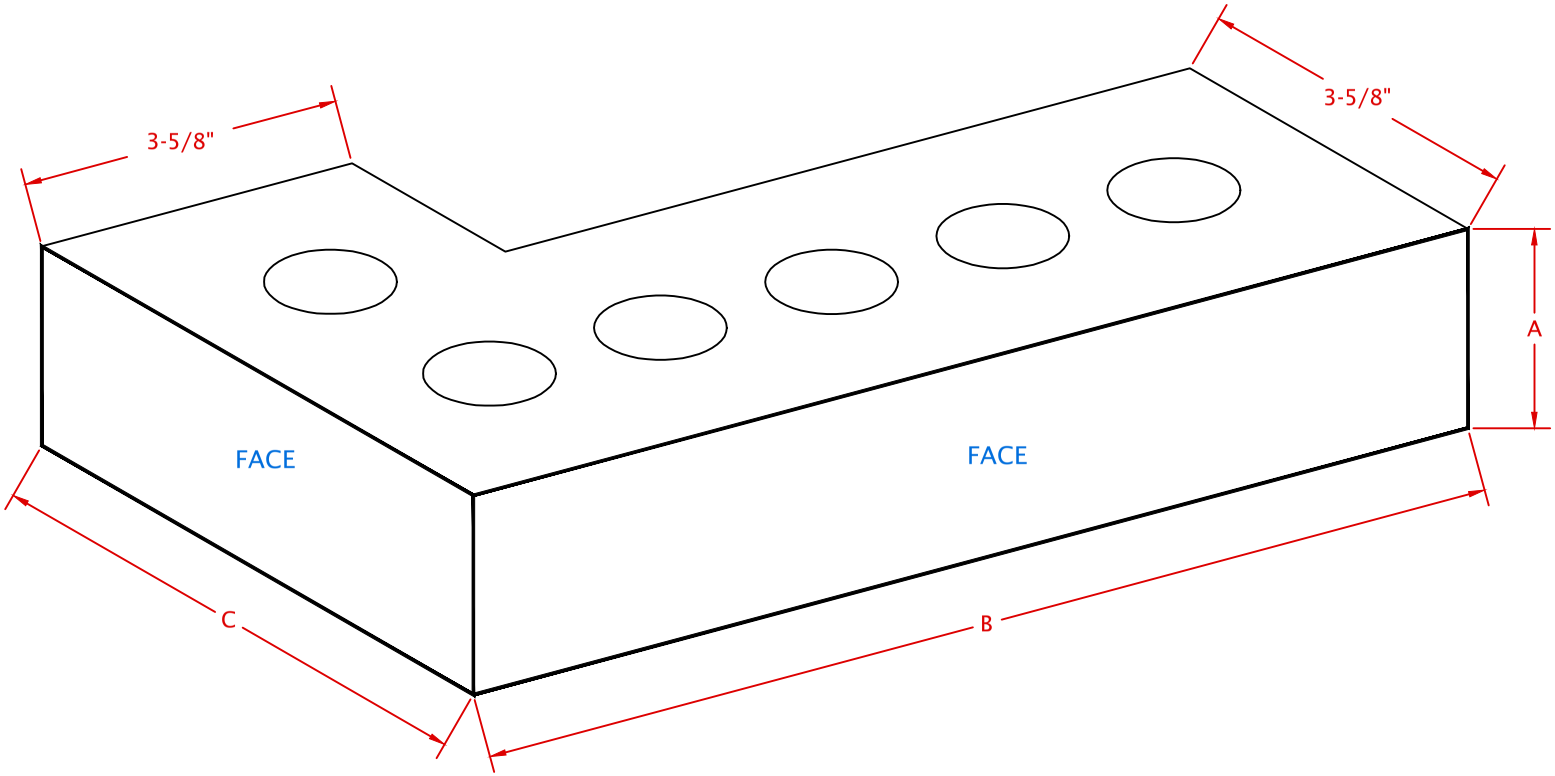

Dimensions Available

A - 2-1/4", 2-13/16", 3-5/8"
B - 5-5/8" - 7-5/8", 11-5/8"
C - 5-5/8", 7-5/8"

Coring May Vary

COLOR	QUANTITY
TEXTURE	DATE
JOB	
DISTRIBUTOR	

ENDICOTT™ CLAY PRODUCTS

P.O. Box 17 Fairbury, NE USA 68352 402/729-3315 FAX: 402/729-5804 Email: endicott@endicott.com www.endicott.com

6" Thru-The-Wall Bond Beam

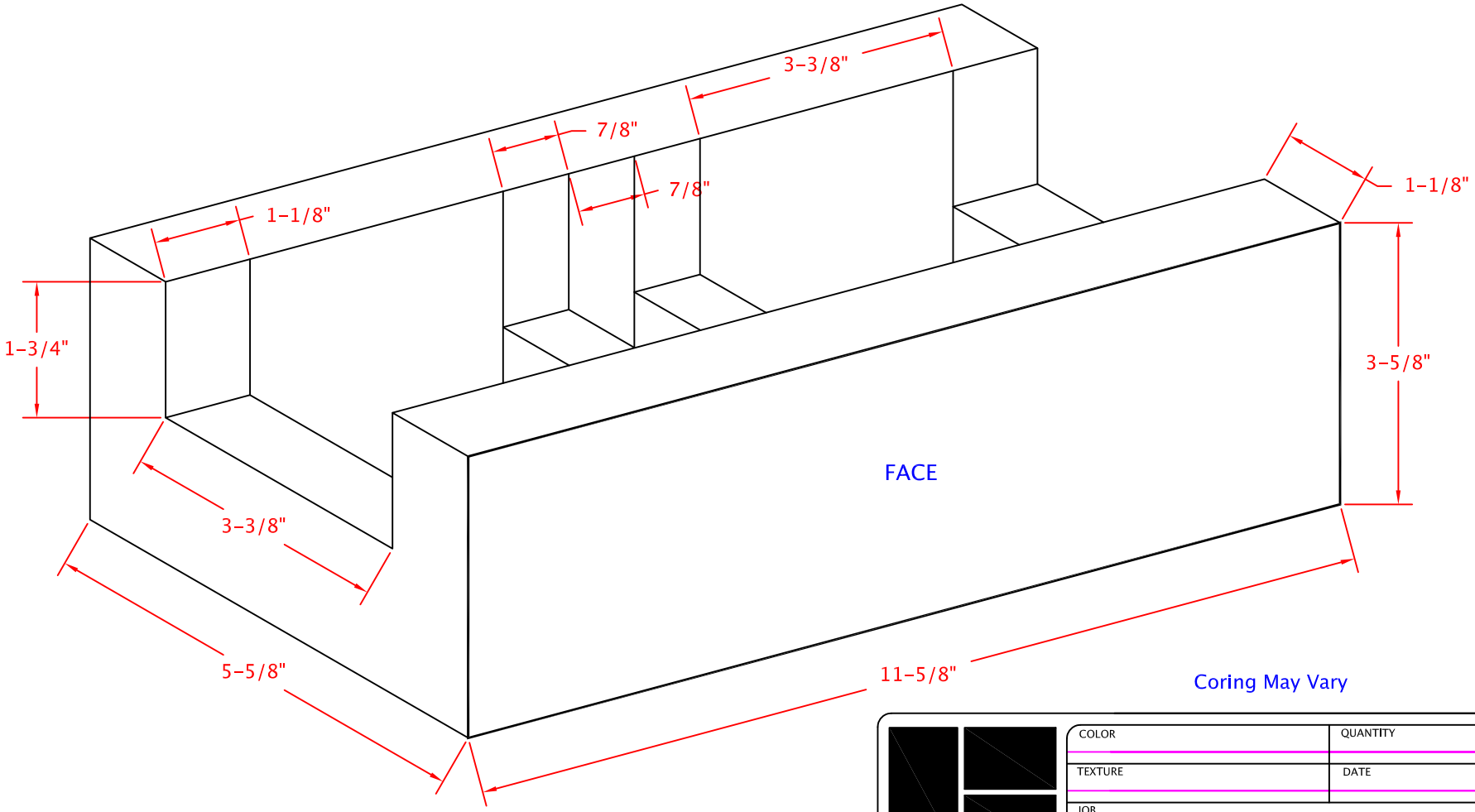

Coring May Vary

COLOR	QUANTITY
TEXTURE	DATE
JOB	
DISTRIBUTOR	

ENDICOTT™ CLAY PRODUCTS

P.O. Box 17 Fairbury, NE USA 68352 402/729-3315 FAX: 402/729-5804 Email: endicott@endicott.com www.endicott.com

8" Thru-The-Wall Bond Beam

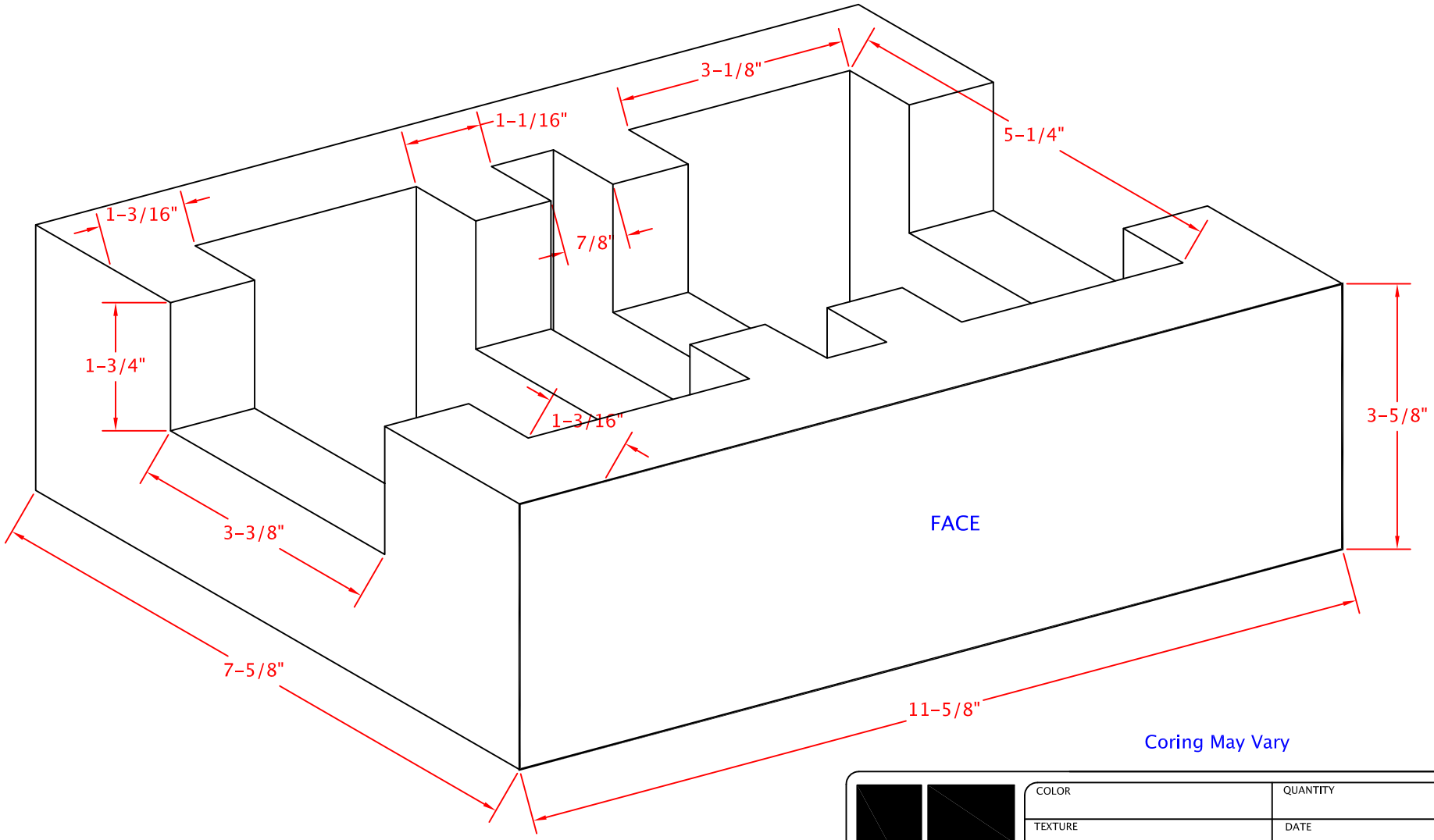

Coring May Vary

COLOR	QUANTITY
TEXTURE	DATE
JOB	
DISTRIBUTOR	

ENDICOTT™ CLAY PRODUCTS

P.O. Box 17 Fairbury, NE USA 68352 402/729-3315 FAX: 402/729-5804 Email: endicott@endicott.com www.endicott.com

8" Thru-The-Wall Corner Unit

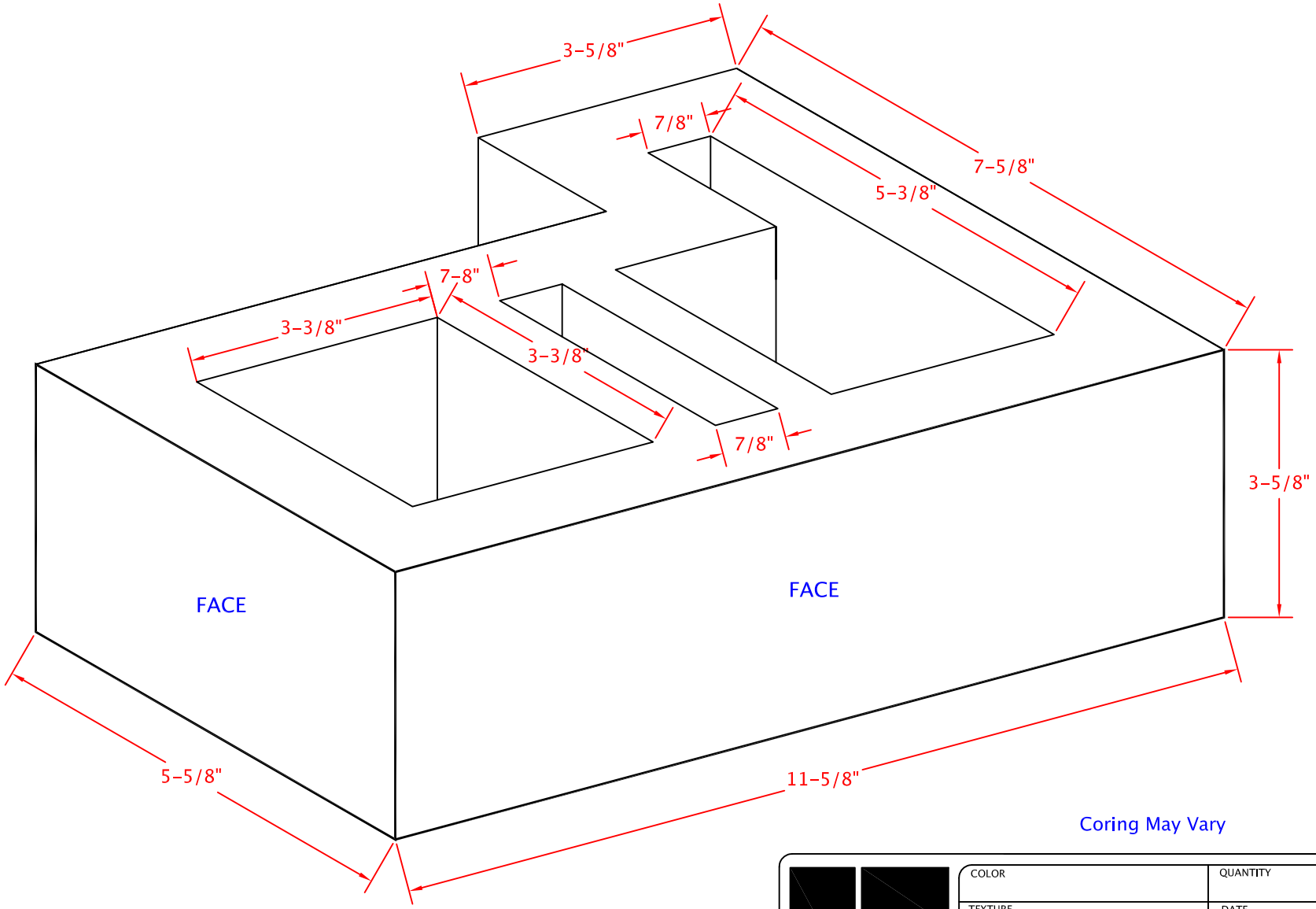

Coring May Vary

COLOR	QUANTITY
TEXTURE	DATE
JOB	
DISTRIBUTOR	

ENDICOTT™ CLAY PRODUCTS

P.O. Box 17 Fairbury, NE USA 68352 402/729-3315 FAX: 402/729-5804 Email: endicott@endicott.com www.endicott.com

Modular Bullnose Rowlock

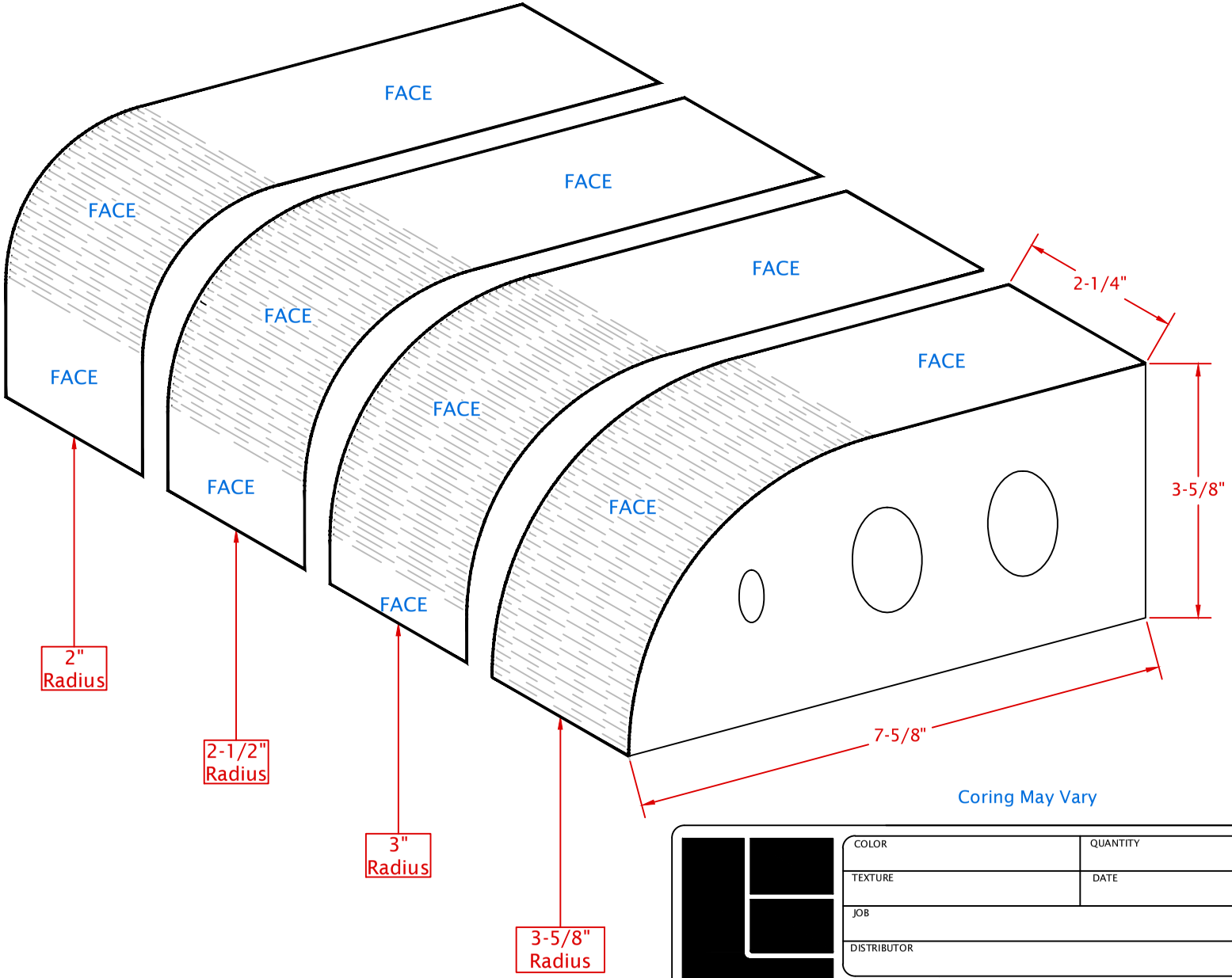

Coring May Vary

COLOR	QUANTITY
TEXTURE	DATE
JOB	
DISTRIBUTOR	

ENDICOTT™ CLAY PRODUCTS

P.O. Box 17 Fairbury, NE USA 68352 402/729-3315 FAX: 402/729-5804 Email: endicott@endicott.com www.endicott.com

Modular Bullnose Rowlock

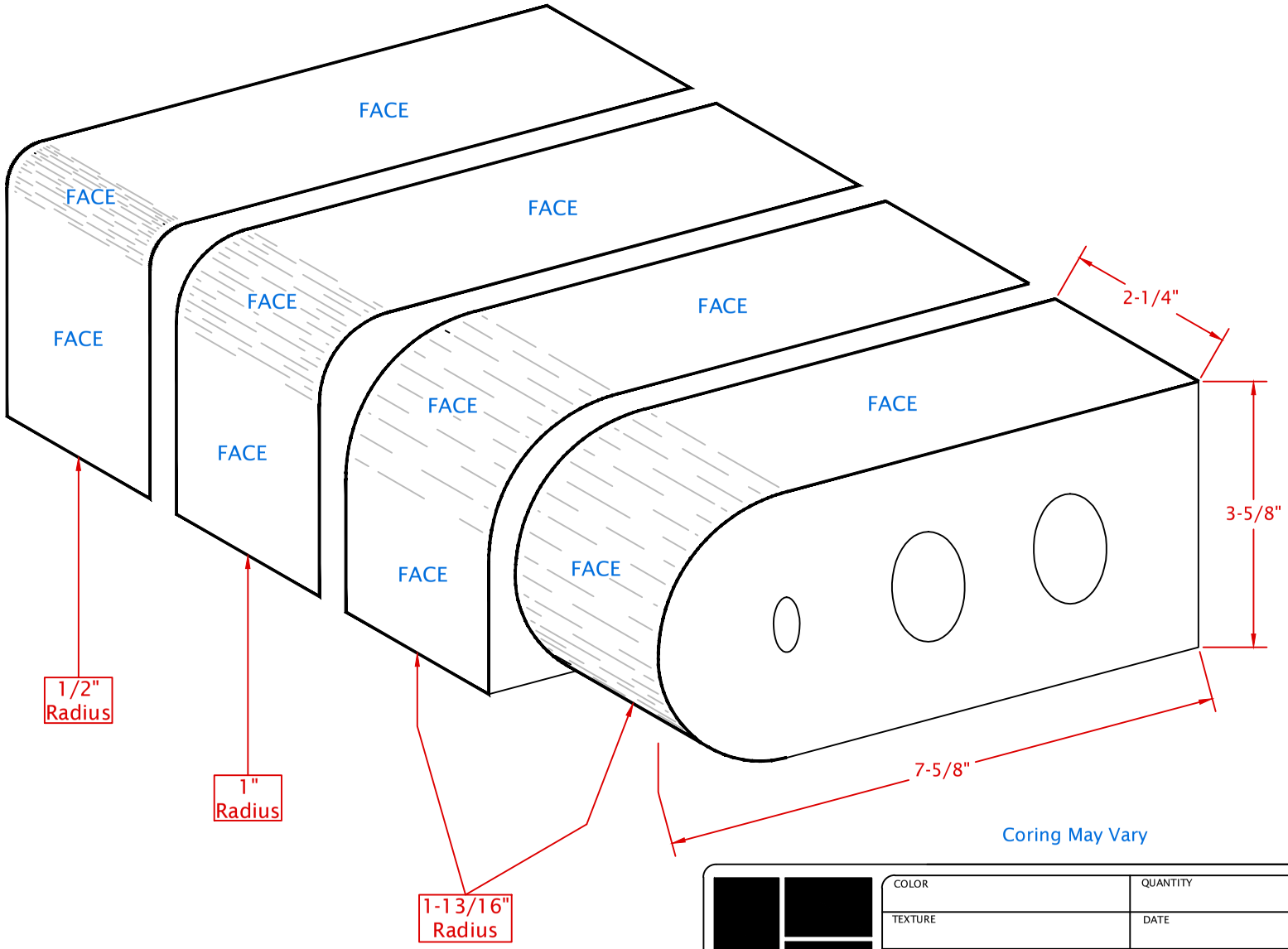

Coring May Vary

COLOR	QUANTITY
TEXTURE	DATE
JOB	
DISTRIBUTOR	

ENDICOTT™ CLAY PRODUCTS

P.O. Box 17 Fairbury, NE USA 68352 402/729-3315 FAX: 402/729-5804 Email: endicott@endicott.com www.endicott.com

8" T-T-W Bonded Corner Detail

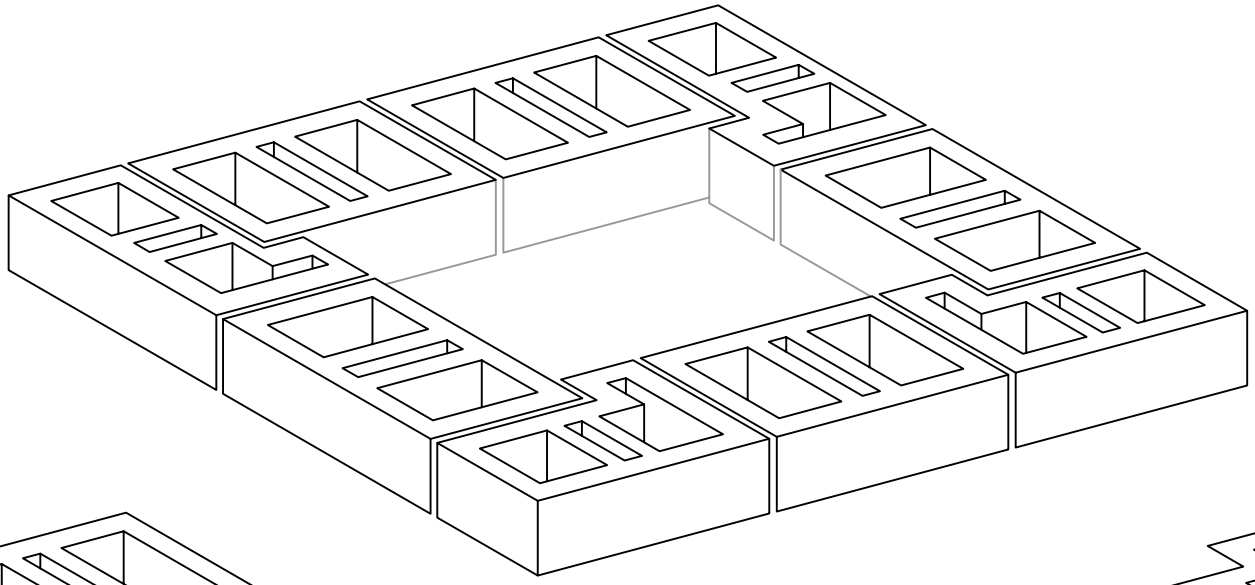

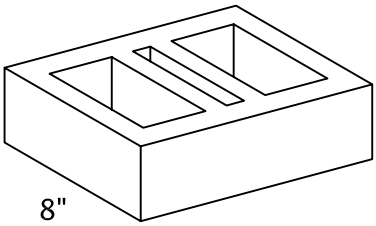

8"
Thru-The-Wall

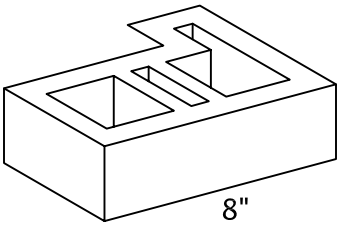

8"
Thru-The-Wall
Corner

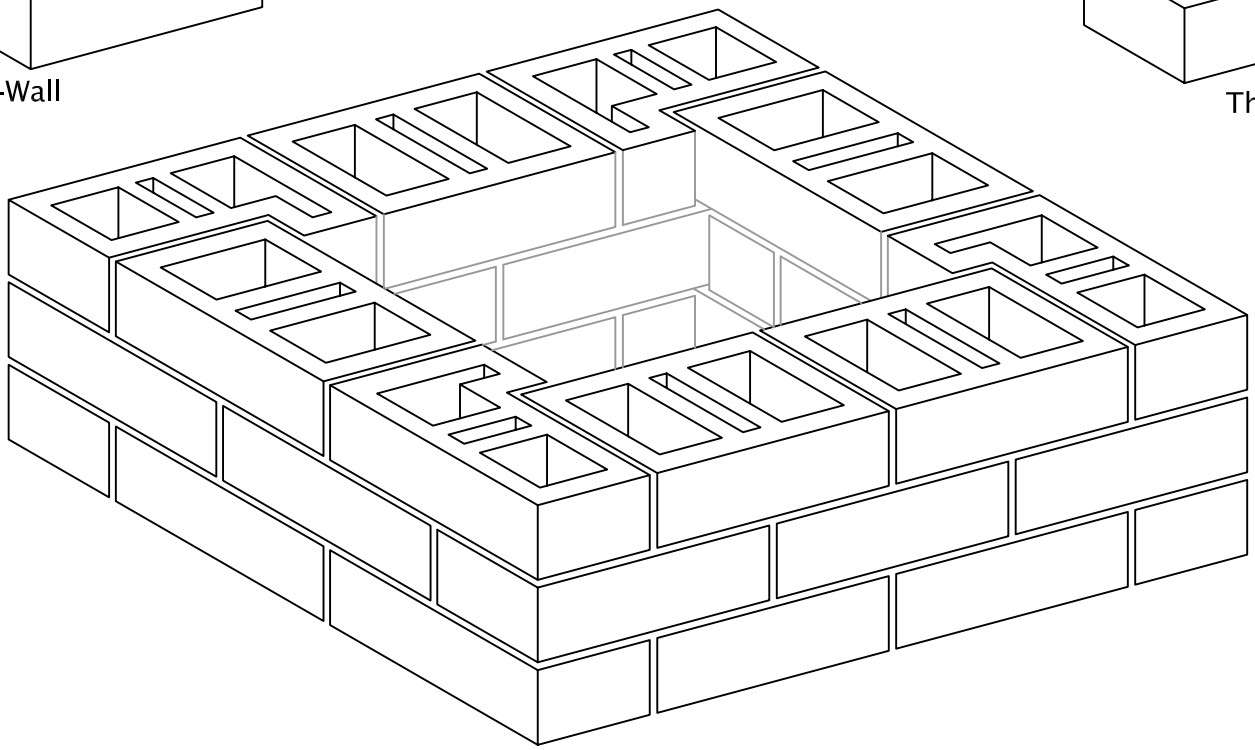

Coring May Vary

COLOR	QUANTITY
TEXTURE	DATE
JOB	
DISTRIBUTOR	

ENDICOTT™ CLAY PRODUCTS

P.O. Box 17 Falrbury, NE USA 68352 402/729-3315 FAX: 402/729-5804 Email: endlcott@endlcott.com www.endlcott.com

BOND BEAM PLACEMENT

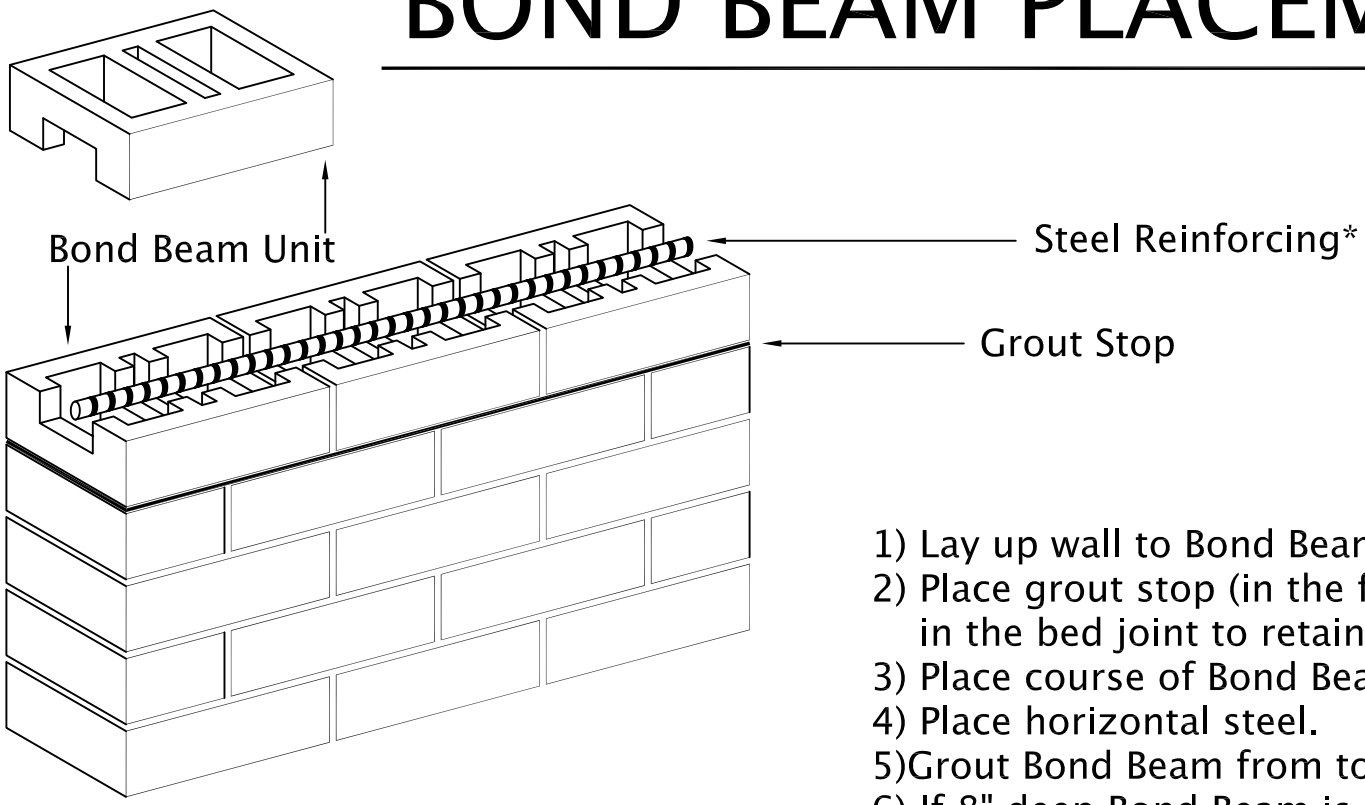

1) Lay up wall to Bond Beam height.
2) Place grout stop (in the form of steel or nylon mesh) in the bed joint to retain grout in Bond Beam units.
3) Place course of Bond Beam units.
4) Place horizontal steel.
5)Grout Bond Beam from top.
6) If 8" deep Bond Beam is required, complete steps 1 - 4 above. (Omit step 5.)
7) Lay second course of Bond Beam units in inverted position.
8) Grout Bond Beam form top.

ENDICOTT™
CLAY PRODUCTS

P.O. Box 17 Fairbury, Nebraska USA 68352
402/729-3315 FAX: 402/729-5804
Email: endicott@endicott.com www.endicott.com

* Note: Steel reinforcing size and placement to be determined by structural engineer.

FLASHING DETAIL FOR 8" TTW

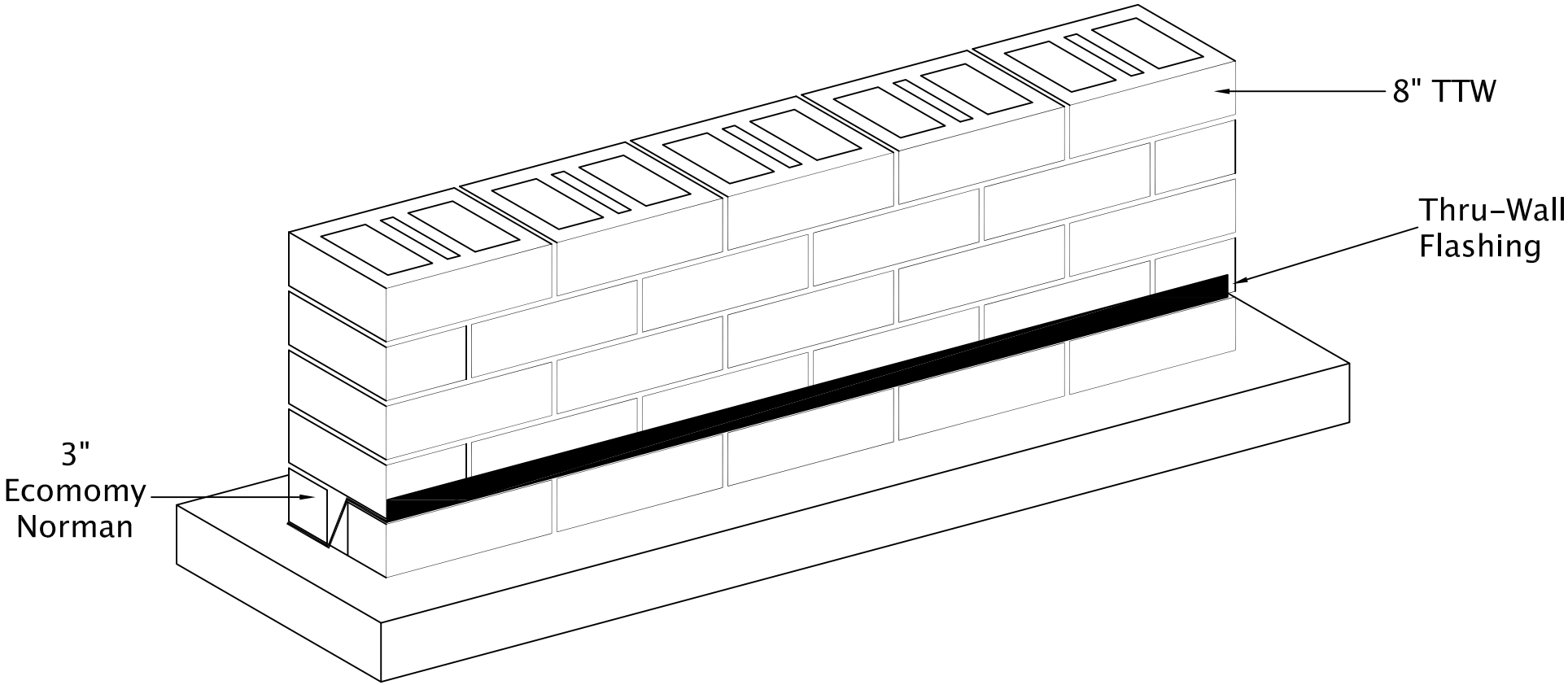

ENDICOTT™
CLAY PRODUCTS

P.O. Box 17 Fairbury, Nebraska USA 68352
402/729-3315 FAX: 402/729-5804
Email: endicott@endicott.com www.endicott.com

6" or 8" Thru-The-Wall Pre-Fab Lintel

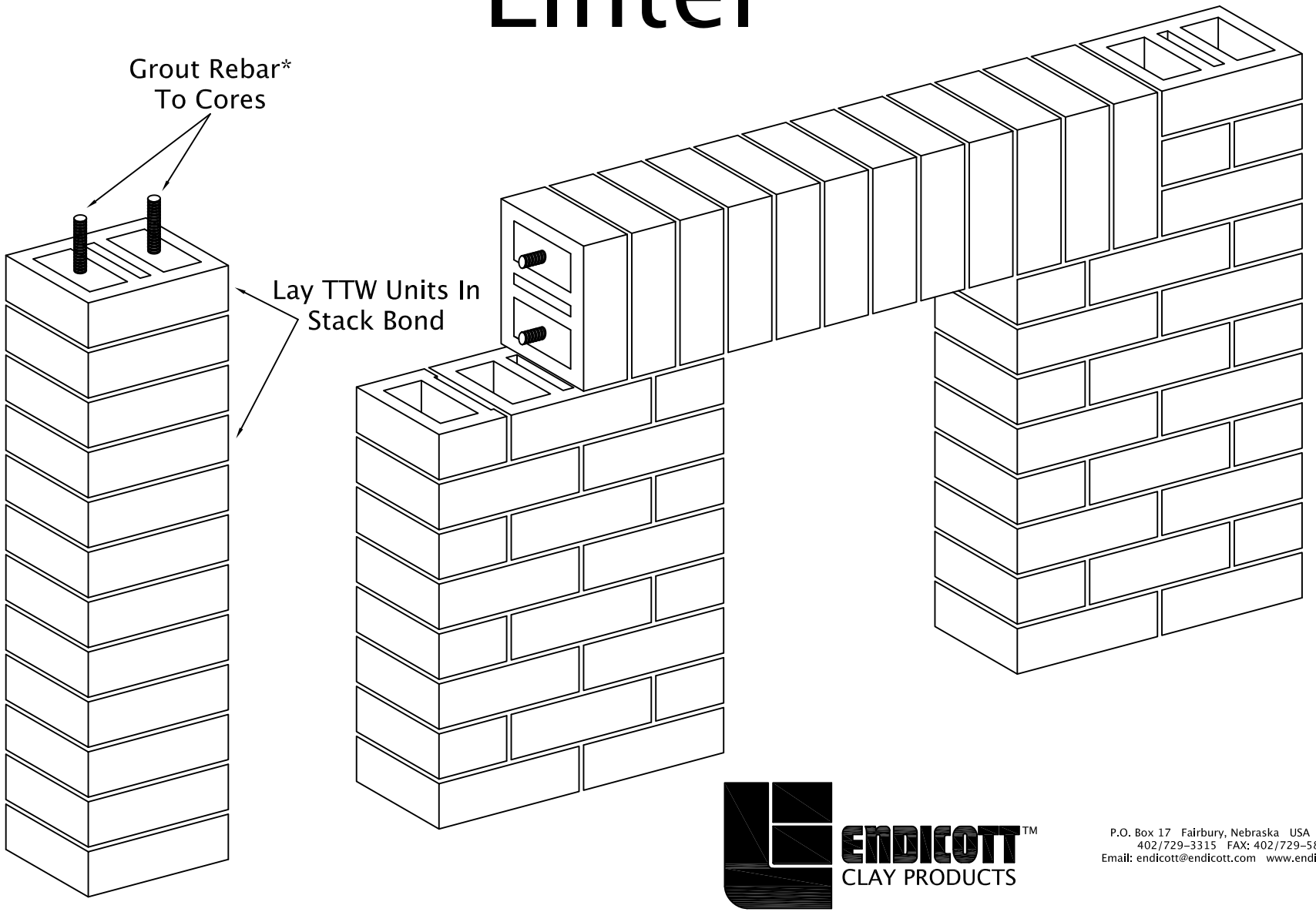

ENDICOTT™
CLAY PRODUCTS

P.O. Box 17 Fairbury, Nebraska USA 68352
402/729-3315 FAX: 402/729-5804
Email: endicott@endicott.com www.endicott.com

*NOTE: Size and amount of reinforcing steel, as well as span to be determined by structural engineer.

In 1920, rich mineral deposits were discovered in Jefferson County, Nebraska. These rich minerals help give Endicott brick their unmatched color and high sheen. Across the North America, Endicott's collection of face brick, thin brick, pavers, tile and special shapes are setting the solid world in motion.

For other literature, samples and the name of your nearest distributor, conact Endicott today.

ENDICOTT™

Endicott Clay Products Company
P.O. Box 17
Fairbury, Nebraska USA 68352
402-729-3315 FAX: 402-729-5804

endicott.com

Metropolitan State Hospital
Color: Dark Ironspot, Desert Ironspot Dark
Texture: Velour
Size: Shapes
Location: Norwalk, CA